FLOS

F7764048 Ochre-Grey

Tatou Floor

Designed by Patricia Urquiola, 2012

Halogen - 205W

Diffused light floor lamp. External diffuser in Polycarbonate. Internal diffuser in injection-printed opal Polycarbonate. Support and base in painted steel.

Are you a professional and your project needs consulting and support?

BOOK AN APPOINTMENT

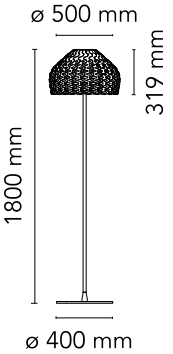

Main specifications

EAN	8059607007426
Mounting	Floor
Environments	Indoor dry location
Light source type	Bulb
Light sources included	No
Lamp category	Halogen
Lamp holders	E27
Ilcos	HSGS
Number of lamps	1
Power (W)	205

Physical

Colour	Ochre-Grey
Length (mm)	500
Cord colour	Black
Cord length (mm)	1700
Net weight (kg)	16.4
Package volume (m3)	0.59
IP internal	20

Download

Mounting instructions PDF

Photometric Files

LDT / IES LDT

Technical Drawings

2D ZIP

3D ZIP

©2026 Flos - P.IVA 00290820174 - 3/6/2026

In our constantly evolving world and business, technical upgrades happen every day. This means all product specifications and data are subject to change without warning in order t improve reliability, function, performance or otherwise. We make every effort to ensure the accuracy of our product images, however due to different lighting and screens used for viewing, the colours may vary. Images are indicative of the quality and style of the product but may not represent the precise details of the product you receive. This is because we are constantly working to make improvements. For aesthetic reasons, cables and/or electrical elements are often not shown. Refer to technical data sheets for all technical data. Images and colours are not part of any contract or warranty in any way.

Schematic light drawing

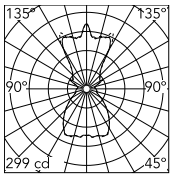

Luminous flux luminaire
4200 lm

Photometric

Lighting type	Direct, Indirect
Light distribution	Asymmetric
Extreme cut off	No

Electrical

Insulation class	II
Frequency (Hz)	50/60
Main voltage (Vac)	220-240
Dimmable	Yes
Dimming interface	Dimmer Integrated
Plug type	Type C
Batteries inside	No

©2026 Flos - P.IVA 00290820174 - 3/6/2026

In our constantly evolving world and business, technical upgrades happen every day. This means all product specifications and data are subject to change without warning in order t improve reliability, function, performance or otherwise. We make every effort to ensure the accuracy of our product images, however due to different lighting and screens used for viewing, the colours may vary. Images are indicative of the quality and style of the product but may not represent the precise details of the product you receive. This is because we are constantly working to make improvements. For aesthetic reasons, cables and/or electrical elements are often not shown. Refer to technical data sheets for all technical data. Images and colours are not part of any contract or warranty in any way.

Bulbs

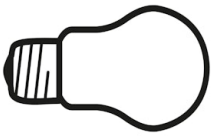

NOT INCLUDED

RF30429

LED Opal Lamp E27 21W 2700K A65 Dimmable

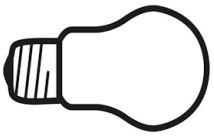

NOT INCLUDED

RF26998

LED 21W E27 2450lm 3000K DIMMER

©2026 Flos - P.IVA 00290820174 - 3/6/2026

In our constantly evolving world and business, technical upgrades happen every day. This means all product specifications and data are subject to change without warning in order t improve reliability, function, performance or otherwise. We make every effort to ensure the accuracy of our product images, however due to different lighting and screens used for viewing, the colours may vary. Images are indicative of the quality and style of the product but may not represent the precise details of the product you receive. This is because we are constantly working to make improvements. For aesthetic reasons, cables and/or electrical elements are often not shown. Refer to technical data sheets for all technical data. Images and colours are not part of any contract or warranty in any way.

Spare Parts

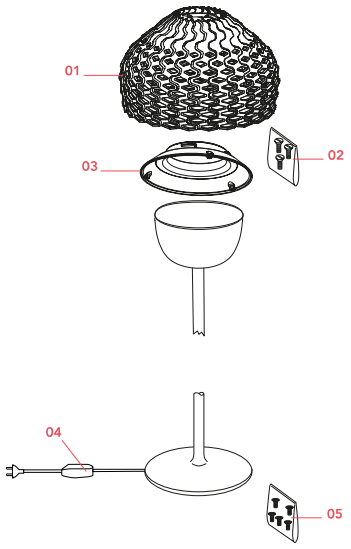

01.	Tatou F/S Ochre-grey diffuser assembly	F7755048
02.	Tatou F/S Kit with screws opal reflector assembly	RF7755100
03.	Tatou F/S Reflector assembly	RF7755200
04.	Black Led Dimmer 4W -25W	RF28209
05.	Kit of 5 white feed pads for base	RF3020100

©2026 Flos - P.IVA 00290820174 - 3/6/2026

In our constantly evolving world and business, technical upgrades happen every day. This means all product specifications and data are subject to change without warning in order t improve reliability, function, performance or otherwise. We make every effort to ensure the accuracy of our product images, however due to different lighting and screens used for viewing, the colours may vary. Images are indicative of the quality and style of the product but may not represent the precise details of the product you receive. This is because we are constantly working to make improvements. For aesthetic reasons, cables and/or electrical elements are often not shown. Refer to technical data sheets for all technical data. Images and colours are not part of any contract or warranty in any way.

F7755048

Tatou F/S Ochre-grey diffuser assembly

RF7755100

Tatou F/S Kit with screws opal reflector assembly

RF7755200

Tatou F/S Reflector assembly

RF28209

Black Led Dimmer 4W -25W

RF3020100

Kit of 5 white feed pads for base

©2026 Flos - P.IVA 00290820174 - 3/6/2026

In our constantly evolving world and business, technical upgrades happen every day. This means all product specifications and data are subject to change without warning in order t improve reliability, function, performance or otherwise. We make every effort to ensure the accuracy of our product images, however due to different lighting and screens used for viewing, the colours may vary. Images are indicative of the quality and style of the product but may not represent the precise details of the product you receive. This is because we are constantly working to make improvements. For aesthetic reasons, cables and/or electrical elements are often not shown. Refer to technical data sheets for all technical data. Images and colours are not part of any contract or warranty in any way.