FLOS

F1366030 Glossy Black

Smithfield Ceiling Pro

Designed by Jasper Morrison, 2009

45W - 2791lm - 2700K - CRI> 95

Ceiling-mounted lamp providing direct light. Aluminium body. Available in gloss black, white, matt black, red, green or MUD. Injection-moulded opalescent methacrylate diffuser. Steel wall and ceiling attachment.

Are you a professional and your project needs consulting and support?

BOOK AN APPOINTMENT

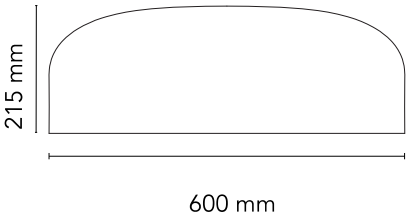

Main specifications

EAN	8059607014899
Mounting	Ceiling
Environments	Indoor dry location
Light source type	LED
Light sources included	Yes
LED type	LED Module
Power (W)	45
Lumen Output (lm)	2791

Physical

Colour	Glossy Black
Length (mm)	600
Net weight (kg)	5.8
Package height (mm)	310
Package width (mm)	710
Package length (mm)	710
Package volume (m3)	0.16
IP internal	20

Download

Mounting instructions PDF

Photometric Files

LDT / IES LDT

Technical Drawings

2D ZIP

3D ZIP

Bim ZIP

©2026 Flos - P.IVA 00290820174 - 3/6/2026

In our constantly evolving world and business, technical upgrades happen every day. This means all product specifications and data are subject to change without warning in order t improve reliability, function, performance or otherwise. We make every effort to ensure the accuracy of our product images, however due to different lighting and screens used for viewing, the colours may vary. Images are indicative of the quality and style of the product but may not represent the precise details of the product you receive. This is because we are constantly working to make improvements. For aesthetic reasons, cables and/or electrical elements are often not shown. Refer to technical data sheets for all technical data. Images and colours are not part of any contract or warranty in any way.

Schematic light drawing

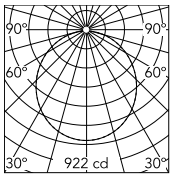

Luminous flux luminaire
2623 lm

Ecodesign and Energy Labelling

This product contains a light source of energy efficiency class F

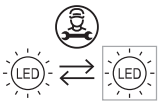

Replaceable (LED only) light source by a professional

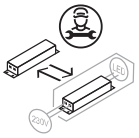

Replaceable control gear by a professional

Photometric

Light distribution	Roto symmetric
CCT (K)	2700
CRI>	95
Extreme cut off	No

Electrical

Insulation class	I
Frequency (Hz)	50/60
Main voltage (Vac)	200-240
Power supply	Integrated
Power supply type	Dimmable Push
Batteries inside	No

©2026 Flos - P.IVA 00290820174 - 3/6/2026

In our constantly evolving world and business, technical upgrades happen every day. This means all product specifications and data are subject to change without warning in order t improve reliability, function, performance or otherwise. We make every effort to ensure the accuracy of our product images, however due to different lighting and screens used for viewing, the colours may vary. Images are indicative of the quality and style of the product but may not represent the precise details of the product you receive. This is because we are constantly working to make improvements. For aesthetic reasons, cables and/or electrical elements are often not shown. Refer to technical data sheets for all technical data. Images and colours are not part of any contract or warranty in any way.

Spare Parts

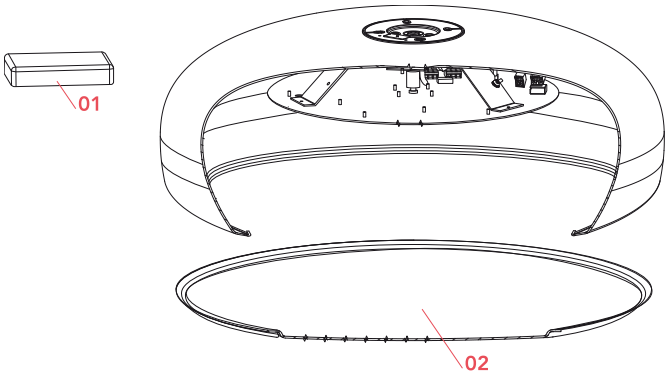

01.	Smithfield Ceiling Driver 45W 450-1050mA	RF31980
02.	Methacrylate diffuser	RF19022

©2026 Flos - P.IVA 00290820174 - 3/6/2026

In our constantly evolving world and business, technical upgrades happen every day. This means all product specifications and data are subject to change without warning in order t improve reliability, function, performance or otherwise. We make every effort to ensure the accuracy of our product images, however due to different lighting and screens used for viewing, the colours may vary. Images are indicative of the quality and style of the product but may not represent the precise details of the product you receive. This is because we are constantly working to make improvements. For aesthetic reasons, cables and/or electrical elements are often not shown. Refer to technical data sheets for all technical data. Images and colours are not part of any contract or warranty in any way.

RF31980

Smithfield Ceiling Driver 45W 450-1050mA

RF19022

Methacrylate diffuser

©2026 Flos - P.IVA 00290820174 - 3/6/2026

In our constantly evolving world and business, technical upgrades happen every day. This means all product specifications and data are subject to change without warning in order t improve reliability, function, performance or otherwise. We make every effort to ensure the accuracy of our product images, however due to different lighting and screens used for viewing, the colours may vary. Images are indicative of the quality and style of the product but may not represent the precise details of the product you receive. This is because we are constantly working to make improvements. For aesthetic reasons, cables and/or electrical elements are often not shown. Refer to technical data sheets for all technical data. Images and colours are not part of any contract or warranty in any way.