FLOS

F0002009 Glossy White

Skygarden 2

Designed by Marcel Wanders,Marcel Wanders studio, 2007

Halogen - 230W

Suspension luminaire providing diffused lighting. Hemispherical, mechanically-processed cast plaster diffuser, painted white inside. Outer finish: rust, glossy black, glossy white or matte gold. Plaster diffuser support in die-cast aluminum alloy. Upper cable gland and blocking ring nut in black injection-molded PC. Shaped, adjustment screws. Transparent, injection-molded, upper and lower silicone shock absorbers. Lampholder and fixing support in PPS. Flashed and blown opal glass diffuser. Molded fixing ring nut in die-cast aluminum alloy with alodine plating. Frieze in photo-etched and mechanically drawn AISI 304 steel. Molded and galvanized steel ceiling attachment. Gray, injection-molded PC rose, painted the same color as the body.

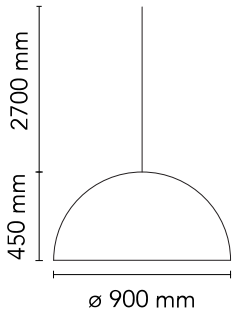

Are you a professional and your project needs consulting and support?

BOOK AN APPOINTMENT

Main specifications

EAN	8059607012895
Mounting	Suspension
Environments	Indoor dry location
Light source type	Bulb
Light sources included	No
Lamp category	Halogen
Lamp holders	E27
Ilcos	HSGS
Number of lamps	1
Power (W)	230

Physical

Colour	Glossy White
Length (mm)	900
Cord colour	Clear
Cord length (mm)	2700
Canopy colour	White
Canopy length/diameter (mm)	172
Canopy height (mm)	86
Net weight (kg)	29
Package height (mm)	680
Package width (mm)	1120
Package length (mm)	1120
Package volume (m3)	0.85
IP internal	20

Download

Mounting instructions PDF

Photometric Files

LDT / IES LDT

Technical Drawings

2D ZIP

3D ZIP

Bim ZIP

©2026 Flos - P.IVA 00290820174 - 3/6/2026

In our constantly evolving world and business, technical upgrades happen every day. This means all product specifications and data are subject to change without warning in order t improve reliability, function, performance or otherwise. We make every effort to ensure the accuracy of our product images, however due to different lighting and screens used for viewing, the colours may vary. Images are indicative of the quality and style of the product but may not represent the precise details of the product you receive. This is because we are constantly working to make improvements. For aesthetic reasons, cables and/or electrical elements are often not shown. Refer to technical data sheets for all technical data. Images and colours are not part of any contract or warranty in any way.

Schematic light drawing

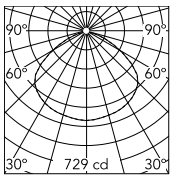

Luminous flux luminaire
4210 lm

Beam Angle: 118°

h(m)	E(lx)	D(m)
1	729	3.36
2	182	6.72
3	81	10.08
4	46	13.44
5	29	16.79

Photometric

Light distribution	Symmetric
Extreme cut off	No

Electrical

Insulation class	I
Frequency (Hz)	50/60
Main voltage (Vac)	220-250
Dimmable	Yes
Dimming interface	Remote Dimmable (Dimmer Not Included)
Batteries inside	No

©2026 Flos - P.IVA 00290820174 - 3/6/2026

In our constantly evolving world and business, technical upgrades happen every day. This means all product specifications and data are subject to change without warning in order t improve reliability, function, performance or otherwise. We make every effort to ensure the accuracy of our product images, however due to different lighting and screens used for viewing, the colours may vary. Images are indicative of the quality and style of the product but may not represent the precise details of the product you receive. This is because we are constantly working to make improvements. For aesthetic reasons, cables and/or electrical elements are often not shown. Refer to technical data sheets for all technical data. Images and colours are not part of any contract or warranty in any way.

Bulbs

NOT INCLUDED

RF29388

LED T46 Lamp E27 20W 2700K
Dimmable

©2026 Flos - P.IVA 00290820174 - 3/6/2026

In our constantly evolving world and business, technical upgrades happen every day. This means all product specifications and data are subject to change without warning in order t improve reliability, function, performance or otherwise. We make every effort to ensure the accuracy of our product images, however due to different lighting and screens used for viewing, the colours may vary. Images are indicative of the quality and style of the product but may not represent the precise details of the product you receive. This is because we are constantly working to make improvements. For aesthetic reasons, cables and/or electrical elements are often not shown. Refer to technical data sheets for all technical data. Images and colours are not part of any contract or warranty in any way.

Spare Parts

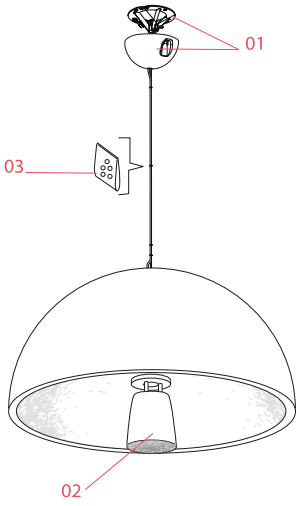

01.	Skygarden 2 White ceiling rose assembly	RF6420209
02.	Skygarden 2 Glass diffuser assembly	RF6420100
03.	Kit of 5 or rings	RF05382

©2026 Flos - P.IVA 00290820174 - 3/6/2026

In our constantly evolving world and business, technical upgrades happen every day. This means all product specifications and data are subject to change without warning in order t improve reliability, function, performance or otherwise. We make every effort to ensure the accuracy of our product images, however due to different lighting and screens used for viewing, the colours may vary. Images are indicative of the quality and style of the product but may not represent the precise details of the product you receive. This is because we are constantly working to make improvements. For aesthetic reasons, cables and/or electrical elements are often not shown. Refer to technical data sheets for all technical data. Images and colours are not part of any contract or warranty in any way.

RF6420209

Skygarden 2 White ceiling rose assembly

RF6420100

Skygarden 2 Glass diffuser assembly

RF05382

Kit of 5 or rings

©2026 Flos - P.IVA 00290820174 - 3/6/2026

In our constantly evolving world and business, technical upgrades happen every day. This means all product specifications and data are subject to change without warning in order t improve reliability, function, performance or otherwise. We make every effort to ensure the accuracy of our product images, however due to different lighting and screens used for viewing, the colours may vary. Images are indicative of the quality and style of the product but may not represent the precise details of the product you receive. This is because we are constantly working to make improvements. For aesthetic reasons, cables and/or electrical elements are often not shown. Refer to technical data sheets for all technical data. Images and colours are not part of any contract or warranty in any way.