FLOS

F4640009 White

OK

Designed by Konstantin Grcic, 2014

18W - 1551lm - 2700K

Lamp providing direct light. Head in gloss varnished. Body in injection-stamped PA66+30%FV with cover in gloss varnished. Orientable head. The light fitting can be moved vertically by running the internal structure of the body on a steel cable tensioned between the ceiling and the floor (useful length 4000mm). Dimmable switch with Soft Touch technology. Adaptor on plug connector with interchangeable plugs.

Are you a professional and your project needs consulting and support?

BOOK AN APPOINTMENT

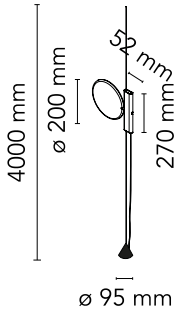

Main specifications

EAN	8059607005057
Mounting	Suspension
Environments	Indoor dry location
Light source type	LED
Light sources included	Yes
LED type	LED Module
Power (W)	18
Lumen Output (lm)	1551

Physical

Colour	White
Length (mm)	200
Cord colour	Black
Cord length (mm)	4000
Canopy colour	White
Canopy length/diameter (mm)	64
Canopy height (mm)	20
Net weight (kg)	2.92
Package height (mm)	140
Package width (mm)	340
Package length (mm)	390
Package volume (m3)	0.02
IP internal	20

Download

Mounting instructions	PDF
Mounting instructions	PDF

Photometric Files

LDT / IES	LDT

Technical Drawings

2D	ZIP
3D	ZIP

©2026 Flos - P.IVA 00290820174 - 3/6/2026

In our constantly evolving world and business, technical upgrades happen every day. This means all product specifications and data are subject to change without warning in order t improve reliability, function, performance or otherwise. We make every effort to ensure the accuracy of our product images, however due to different lighting and screens used for viewing, the colours may vary. Images are indicative of the quality and style of the product but may not represent the precise details of the product you receive. This is because we are constantly working to make improvements. For aesthetic reasons, cables and/or electrical elements are often not shown. Refer to technical data sheets for all technical data. Images and colours are not part of any contract or warranty in any way.

Schematic light drawing

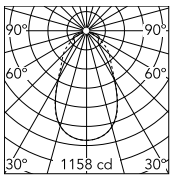

Luminous flux luminaire
1551 lm

Beam Angle: 61°

h(m)	E(lx)	D(m)
1	1158	1.19
2	289	2.38
3	129	3.57
4	72	4.76
5	46	5.95

Ecodesign and Energy Labelling

This product contains a light source of energy efficiency class F

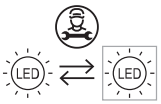

Replaceable (LED only) light source by a professional

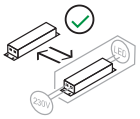

Replaceable control gear by an end-user

Photometric

Lighting type	Direct
Light distribution	Symmetric
CCT (K)	2700
Extreme cut off	No

Electrical

Insulation class	III
Frequency (Hz)	50/60
Main voltage (Vac)	100-240
Power supply	Remote included
Dimmable	Yes
Power supply type	Electronic 24V
Dimming interface	Dimmer Integrated
Plug type	Type A, Type C, Type G
Batteries inside	No

©2026 Flos - P.IVA 00290820174 - 3/6/2026

In our constantly evolving world and business, technical upgrades happen every day. This means all product specifications and data are subject to change without warning in order t improve reliability, function, performance or otherwise. We make every effort to ensure the accuracy of our product images, however due to different lighting and screens used for viewing, the colours may vary. Images are indicative of the quality and style of the product but may not represent the precise details of the product you receive. This is because we are constantly working to make improvements. For aesthetic reasons, cables and/or electrical elements are often not shown. Refer to technical data sheets for all technical data. Images and colours are not part of any contract or warranty in any way.

Spare Parts

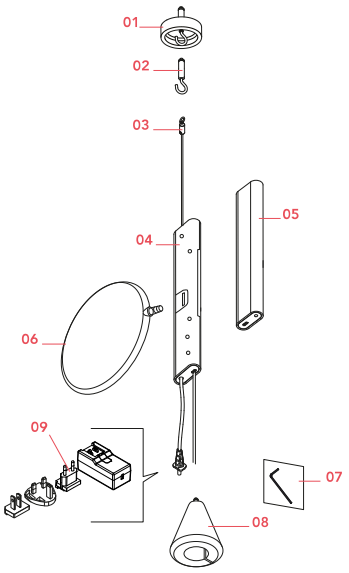

01.	Ok White ceiling rose	RF23032
02.	Ok Anchor with hook	RF4640100
03.	Ok Steel cable 4mt.	RF4640200
03.	Ok Steel cable 6mt.	RF4640300
04.	Ok Internal lamp body assembly	RF4640400
05.	Ok White extrusion	RF22998
06.	Ok White led head assembly	RF28253
07.	Ok Hex Key 2mm for OK lamp	RF06850
08.	Ok Counterweight	RF23023
09.	Black plug assembly kit & 24V driver	RF6600230

©2026 Flos - P.IVA 00290820174 - 3/6/2026

In our constantly evolving world and business, technical upgrades happen every day. This means all product specifications and data are subject to change without warning in order t improve reliability, function, performance or otherwise. We make every effort to ensure the accuracy of our product images, however due to different lighting and screens used for viewing, the colours may vary. Images are indicative of the quality and style of the product but may not represent the precise details of the product you receive. This is because we are constantly working to make improvements. For aesthetic reasons, cables and/or electrical elements are often not shown. Refer to technical data sheets for all technical data. Images and colours are not part of any contract or warranty in any way.

RF23032

Ok White ceiling rose

RF4640100

Ok Anchor with hook

RF4640200

Ok Steel cable 4mt.

RF4640300

Ok Steel cable 6mt.

RF4640400

Ok Internal lamp body assembly

RF22998

Ok White extrusion

RF28253

Ok White led head assembly

RF06850

Ok Hex Key 2mm for OK lamp

©2026 Flos - P.IVA 00290820174 - 3/6/2026

In our constantly evolving world and business, technical upgrades happen every day. This means all product specifications and data are subject to change without warning in order t improve reliability, function, performance or otherwise. We make every effort to ensure the accuracy of our product images, however due to different lighting and screens used for viewing, the colours may vary. Images are indicative of the quality and style of the product but may not represent the precise details of the product you receive. This is because we are constantly working to make improvements. For aesthetic reasons, cables and/or electrical elements are often not shown. Refer to technical data sheets for all technical data. Images and colours are not part of any contract or warranty in any way.

RF23023

Ok Counterweight

RF6600230

Black plug assembly kit & 24V driver

©2026 Flos - P.IVA 00290820174 - 3/6/2026

In our constantly evolving world and business, technical upgrades happen every day. This means all product specifications and data are subject to change without warning in order t improve reliability, function, performance or otherwise. We make every effort to ensure the accuracy of our product images, however due to different lighting and screens used for viewing, the colours may vary. Images are indicative of the quality and style of the product but may not represent the precise details of the product you receive. This is because we are constantly working to make improvements. For aesthetic reasons, cables and/or electrical elements are often not shown. Refer to technical data sheets for all technical data. Images and colours are not part of any contract or warranty in any way.