FLOS

F0279000 Black

Noctambule Suspension 6 Low Cylinder

Designed by Konstantin Grcic, 2019

63W - 2054lm - 2700K

Hanging lamps consisting of interconnecting glass modules reaching a length of 3,2 mt. (126.77") with 4 mt. (157.48") suspended power cable. Cylindrical and semi-spherical transparent blown glass structure, suspended die cast aluminium ring connector, hydroformed steel internal lateral arm and injection moulded optical opal silicone outer ring diffusers. The power supply unit within the ceiling rose can be used as a dimmer to adjust the light intensity by 10% to 100% in either direction by means of the 0-10/1-10V, PUSH, DALI control.

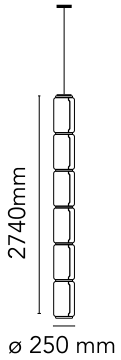

Are you a professional and your project needs consulting and support?

BOOK AN APPOINTMENT

Main specifications

EAN	8059607000748
Mounting	Suspension
Environments	Indoor dry location
Light source type	LED
Light sources included	Yes
LED type	LED Module
Power (W)	63
Lumen Output (lm)	2054

Physical

Colour	Black
Length (mm)	250
Cord colour	Black
Cord length (mm)	4000
Canopy colour	Black
Canopy length/diameter (mm)	187
Canopy height (mm)	45
Net weight (kg)	23.9
Package volume (m3)	0.42
IP internal	20

Download

Mounting instructions	PDF
Mounting instructions	PDF
Mounting instructions	PDF

Photometric Files

LDT / IES	ZIP

Technical Drawings

3D	ZIP
Bim	ZIP

©2026 Flos - P.IVA 00290820174 - 3/6/2026

In our constantly evolving world and business, technical upgrades happen every day. This means all product specifications and data are subject to change without warning in order t improve reliability, function, performance or otherwise. We make every effort to ensure the accuracy of our product images, however due to different lighting and screens used for viewing, the colours may vary. Images are indicative of the quality and style of the product but may not represent the precise details of the product you receive. This is because we are constantly working to make improvements. For aesthetic reasons, cables and/or electrical elements are often not shown. Refer to technical data sheets for all technical data. Images and colours are not part of any contract or warranty in any way.

Ecodesign and Energy Labelling

This product contains a light source of energy efficiency class E

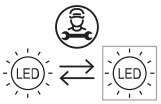

Replaceable (LED only) light source by a professional

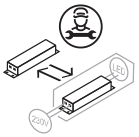

Replaceable control gear by a professional

Schematic light drawing

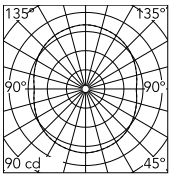

Luminous flux luminaire
286 lm

Photometric

Lighting type	Total
Light distribution	Symmetric
CCT (K)	2700
Extreme cut off	No

Electrical

Insulation class	I
Frequency (Hz)	50/60
Main voltage (Vac)	120-277
Power supply	Integrated
Dimmable	Yes
Power supply type	Dimmable 0-10V, Dimmable 1-10V, Dimmable DALI 1, Dimmable Push
Dimming interface	Remote Dimmable (Dimmer Not Included)
Batteries inside	No

©2026 Flos - P.IVA 00290820174 - 3/6/2026

In our constantly evolving world and business, technical upgrades happen every day. This means all product specifications and data are subject to change without warning in order t improve reliability, function, performance or otherwise. We make every effort to ensure the accuracy of our product images, however due to different lighting and screens used for viewing, the colours may vary. Images are indicative of the quality and style of the product but may not represent the precise details of the product you receive. This is because we are constantly working to make improvements. For aesthetic reasons, cables and/or electrical elements are often not shown. Refer to technical data sheets for all technical data. Images and colours are not part of any contract or warranty in any way.

Spare Parts

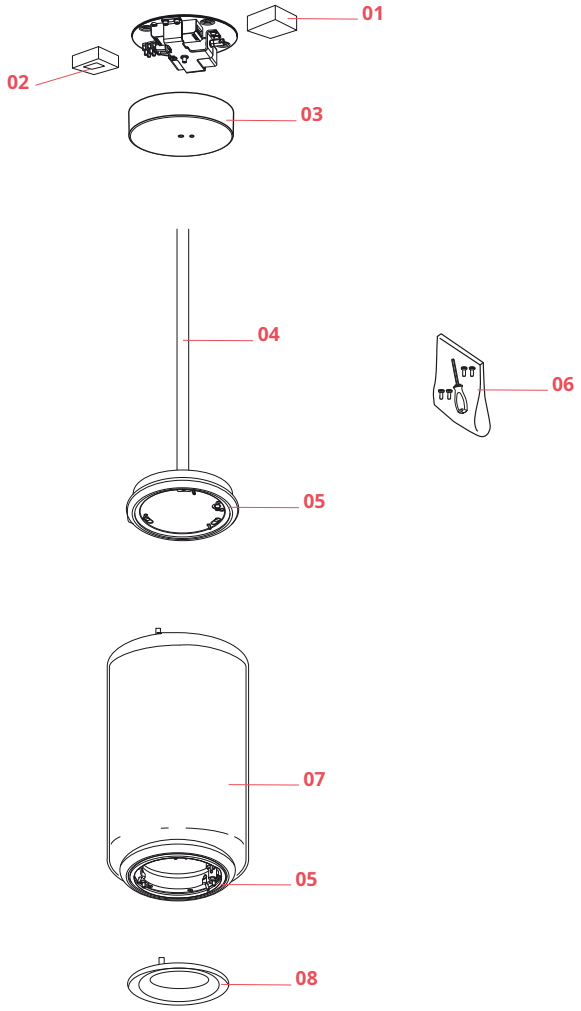

00.	Push button and cables assembly for dimmer	RF27318
01.	Power supply kit for Arrangements small & Noctambule	RF0410500
02.	Led dimmer kit	RF34197
03.	Noctambule ceiling rose cover	RF27422
04.	Noctambule Suspension attack	F0253030
05.	Ring led diffuser	RF27498
06.	Fixing screws kit	RF0254100
07.	Noctambule Low Cylinder	F0254000
08.	Noctambule Suspension Terminal ring	F0258030

©2026 Flos - P.IVA 00290820174 - 3/6/2026

In our constantly evolving world and business, technical upgrades happen every day. This means all product specifications and data are subject to change without warning in order t improve reliability, function, performance or otherwise. We make every effort to ensure the accuracy of our product images, however due to different lighting and screens used for viewing, the colours may vary. Images are indicative of the quality and style of the product but may not represent the precise details of the product you receive. This is because we are constantly working to make improvements. For aesthetic reasons, cables and/or electrical elements are often not shown. Refer to technical data sheets for all technical data. Images and colours are not part of any contract or warranty in any way.

RF27318

Push button and cables assembly for dimmer

RF0410500

Power supply kit for Arrangements small & Noctambule

RF34197

Led dimmer kit

RF27422

Noctambule ceiling rose cover

F0253030

Noctambule Suspension attack

RF27498

Ring led diffuser

RF0254100

Fixing screws kit

F0254000

Noctambule Low Cylinder

©2026 Flos - P.IVA 00290820174 - 3/6/2026

In our constantly evolving world and business, technical upgrades happen every day. This means all product specifications and data are subject to change without warning in order t improve reliability, function, performance or otherwise. We make every effort to ensure the accuracy of our product images, however due to different lighting and screens used for viewing, the colours may vary. Images are indicative of the quality and style of the product but may not represent the precise details of the product you receive. This is because we are constantly working to make improvements. For aesthetic reasons, cables and/or electrical elements are often not shown. Refer to technical data sheets for all technical data. Images and colours are not part of any contract or warranty in any way.

F0258030

Noctambule Suspension Terminal ring

©2026 Flos - P.IVA 00290820174 - 3/6/2026

In our constantly evolving world and business, technical upgrades happen every day. This means all product specifications and data are subject to change without warning in order t improve reliability, function, performance or otherwise. We make every effort to ensure the accuracy of our product images, however due to different lighting and screens used for viewing, the colours may vary. Images are indicative of the quality and style of the product but may not represent the precise details of the product you receive. This is because we are constantly working to make improvements. For aesthetic reasons, cables and/or electrical elements are often not shown. Refer to technical data sheets for all technical data. Images and colours are not part of any contract or warranty in any way.