FLOS

F0287000 Black

Noctambule Floor 3 High Cylinder Small Base

Designed by Konstantin Grcic, 2019

36W - 1093lm - 2700K

Standing lamps consisting of interconnecting glass modules reaching a height of 2,17 metres (85.43"). Cylindrical and semi-spherical transparent blown glass structure, die cast aluminium base and rings, hydroformed steel internal lateral arms and injection moulded optical opal silicone outer ring diffusers. The power supply cable is 2 metres (78.74") long, with a pedal operated panel used as a dimmer to adjust the light intensity by 10% to 100% in either direction. Wall mounted power supply unit with interchangeable plugs.

Are you a professional and your project needs consulting and support?

BOOK AN APPOINTMENT

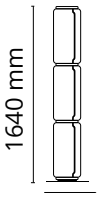

ø 390 mm

Main specifications

EAN	8059607000823
Mounting	Floor
Environments	Indoor dry location
Light source type	LED
Light sources included	Yes
LED type	LED Module
Power (W)	36
Lumen Output (lm)	1093

Physical

Colour	Black
Length (mm)	250
Cord colour	Black
Cord length (mm)	4000
Net weight (kg)	18.8
Package volume (m3)	0.27
IP internal	20

Download

Mounting instructions	PDF
Mounting instructions	PDF
Mounting instructions	PDF

Photometric Files

LDT / IES	ZIP

Technical Drawings

3D	ZIP
Bim	ZIP

©2026 Flos - P.IVA 00290820174 - 3/6/2026

In our constantly evolving world and business, technical upgrades happen every day. This means all product specifications and data are subject to change without warning in order t improve reliability, function, performance or otherwise. We make every effort to ensure the accuracy of our product images, however due to different lighting and screens used for viewing, the colours may vary. Images are indicative of the quality and style of the product but may not represent the precise details of the product you receive. This is because we are constantly working to make improvements. For aesthetic reasons, cables and/or electrical elements are often not shown. Refer to technical data sheets for all technical data. Images and colours are not part of any contract or warranty in any way.

Schematic light drawing

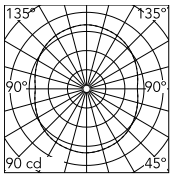

Luminous flux luminaire
286 lm

Ecodesign and Energy Labelling

This product contains a light source of energy efficiency class E

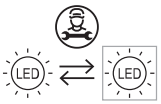

Replaceable (LED only) light source by a professional

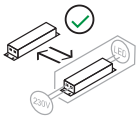

Replaceable control gear by an end-user

Photometric

Lighting type	Total
Light distribution	Symmetric
CCT (K)	2700
Extreme cut off	No

Electrical

Insulation class	III
Frequency (Hz)	50/60
Main voltage (Vac)	100-240
Power supply	Remote included
Dimmable	Yes
Power supply type	Electronic 48V
Dimming interface	Dimmer Integrated
Plug type	Type A, Type C, Type G
Batteries inside	No

©2026 Flos - P.IVA 00290820174 - 3/6/2026

In our constantly evolving world and business, technical upgrades happen every day. This means all product specifications and data are subject to change without warning in order t improve reliability, function, performance or otherwise. We make every effort to ensure the accuracy of our product images, however due to different lighting and screens used for viewing, the colours may vary. Images are indicative of the quality and style of the product but may not represent the precise details of the product you receive. This is because we are constantly working to make improvements. For aesthetic reasons, cables and/or electrical elements are often not shown. Refer to technical data sheets for all technical data. Images and colours are not part of any contract or warranty in any way.

Spare Parts

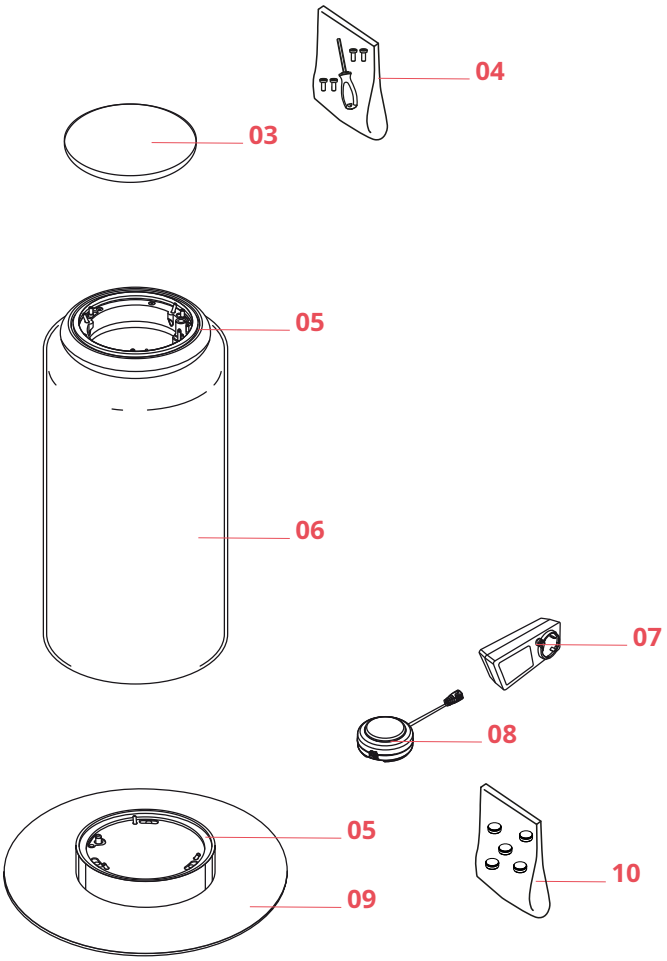

03.	Noctambule Floor Terminal cap	F0293030
04.	Fixing screws kit	RF0254100
05.	Ring led diffuser	RF27498
06.	Noctambule High Cylinder	F0257000
07.	Black plug assembly kit & 48V driver	RF6600130
08.	Noctambule switch dimmer assembly (with EMC filter)	RF37082
09.	Noctambule Floor Small base	F0261030
10.	Noctambule F n°5 adjustable feet kit	RF0254200

©2026 Flos - P.IVA 00290820174 - 3/6/2026

In our constantly evolving world and business, technical upgrades happen every day. This means all product specifications and data are subject to change without warning in order t improve reliability, function, performance or otherwise. We make every effort to ensure the accuracy of our product images, however due to different lighting and screens used for viewing, the colours may vary. Images are indicative of the quality and style of the product but may not represent the precise details of the product you receive. This is because we are constantly working to make improvements. For aesthetic reasons, cables and/or electrical elements are often not shown. Refer to technical data sheets for all technical data. Images and colours are not part of any contract or warranty in any way.

F0293030

Noctambule Floor Terminal cap

RF0254100

Fixing screws kit

RF27498

Ring led diffuser

F0257000

Noctambule High Cylinder

RF6600130

Black plug assembly kit & 48V driver

RF37082

Noctambule switch dimmer assembly (with EMC filter)

F0261030

Noctambule Floor Small base

RF0254200

Noctambule F n°5 adjustable feet kit

©2026 Flos - P.IVA 00290820174 - 3/6/2026

In our constantly evolving world and business, technical upgrades happen every day. This means all product specifications and data are subject to change without warning in order t improve reliability, function, performance or otherwise. We make every effort to ensure the accuracy of our product images, however due to different lighting and screens used for viewing, the colours may vary. Images are indicative of the quality and style of the product but may not represent the precise details of the product you receive. This is because we are constantly working to make improvements. For aesthetic reasons, cables and/or electrical elements are often not shown. Refer to technical data sheets for all technical data. Images and colours are not part of any contract or warranty in any way.