FLOS

F3745000 Glass

Luce Orizzontale S3

Designed by Ronan & Erwan Bouroullec, 2022

165W - 8018lm - 2700K - CRI> 95

Suspended lamp consisting of interconnected glass modules that reach a length of 1.66 mt. (S1) 2.07 mt. (S2) 2.49 mt. (S3) with 2.70 m suspended power cable. The cylindrical transparent glass modules are created through an artisanal process by pouring the glass into a rotating mold to obtain an exclusive finish that makes each single piece unique. Internal structure in polished extruded aluminum equipped with two linear LED modules for direct and indirect lighting downwards. The modules can be easily removed and replaced in case of maintenance. The power supply unit and the Dali Dimmer are located within the ceiling rose while a touch control button, positioned on one end of the product, allows the luminaire to be controlled in three different modes. Control options available: TOUCH_ Features direct control via the touch button on the lamp. This option allows to dim and adjust the light intensity of both the up and down emission (individually or combined) from 10% to 100%. PUSH&TOUCH_Features remote on/off control via Push button as well as dim and adjustability of the light tensity of both the up and down emission (individually or combined) from 10% to 100% through the touch button integrated on the lamp. DALI&TOUCH_ Features remote on/off control via DALI DT6 as well as dim and adjustability of the light tensity of both the up and down emission (individually or combined) from 10% to 100% through the touch button integrated on the lamp.

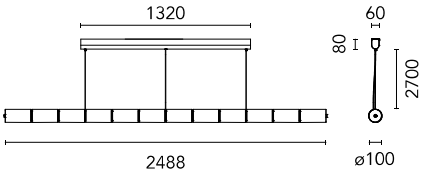

Are you a professional and your project needs consulting and support?

BOOK AN APPOINTMENT

Download

Mounting instructions PDF

Photometric Files

ULD ULD

Technical Drawings

2D DWG

3D ZIP

Bim ULD

©2026 Flos - P.IVA 00290820174 - 3/11/2026

In our constantly evolving world and business, technical upgrades happen every day. This means all product specifications and data are subject to change without warning in order t improve reliability, function, performance or otherwise. We make every effort to ensure the accuracy of our product images, however due to different lighting and screens used for viewing, the colours may vary. Images are indicative of the quality and style of the product but may not represent the precise details of the product you receive. This is because we are constantly working to make improvements. For aesthetic reasons, cables and/or electrical elements are often not shown. Refer to technical data sheets for all technical data. Images and colours are not part of any contract or warranty in any way.

Main specifications

Mounting	Suspension
Environments	Indoor dry location
Light source type	LED
Light sources included	Yes
LED type	LED Module
Power (W)	165
Lumen Output (lm)	8018

Physical

Colour	Glass
Length (mm)	2488
Cord colour	Clear
Cord length (mm)	2700
Canopy colour	White
Canopy length/diameter (mm)	1316
Canopy width (mm)	61
Canopy height (mm)	78
Net weight (kg)	41
Package volume (m3)	0.26
IP internal	20

Ecodesign and Energy Labelling

This product contains a light source of energy efficiency class F

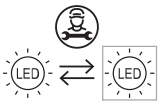

Replaceable (LED only) light source by a professional

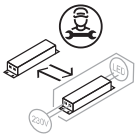

Replaceable control gear by a professional

Photometric

Light distribution	Symmetric
CCT (K)	2700
CRI>	95
Extreme cut off	No

Electrical

Insulation class	I
Frequency (Hz)	50/60
Main voltage (Vac)	100-240
LED current (mA)	700
Power supply	Integrated
Dimmable	Yes
Power supply type	Dimmer on board
Dimming interface	Dimmer Integrated

©2026 Flos - P.IVA 00290820174 - 3/11/2026

In our constantly evolving world and business, technical upgrades happen every day. This means all product specifications and data are subject to change without warning in order t improve reliability, function, performance or otherwise. We make every effort to ensure the accuracy of our product images, however due to different lighting and screens used for viewing, the colours may vary. Images are indicative of the quality and style of the product but may not represent the precise details of the product you receive. This is because we are constantly working to make improvements. For aesthetic reasons, cables and/or electrical elements are often not shown. Refer to technical data sheets for all technical data. Images and colours are not part of any contract or warranty in any way.

Spare Parts

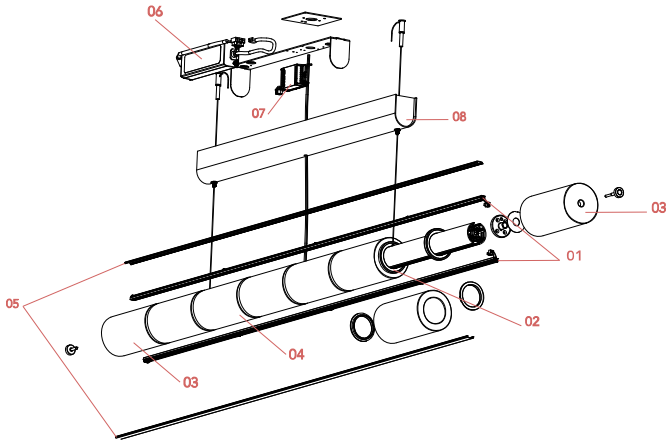

00.	Luce Orizzontale Suspension 3 Accessory kit set	RF34046
01.	Luce Orizzontale Suspension 3 Led board	RF3748400
02.	Luce Orizzontale Ring and 4 mt wiring	RF3746200
03.	Luce Orizzontale Closed glass difusser	RF3746300
04.	Luce Orizzontale Open glass difusser	RF3746400
05.	Luce Orizzontale Suspension 3 Linear diffuser	RF3748200
06.	Luce Orizzontale Driver assembly	RF3750400
07.	Luce Orizzontale Ceiling rose dimmer	RF36893
08.	Luce Orizzontlae Suspension 3 White ceiling rose cover	RF3748300

©2026 Flos - P.IVA 00290820174 - 3/11/2026

In our constantly evolving world and business, technical upgrades happen every day. This means all product specifications and data are subject to change without warning in order t improve reliability, function, performance or otherwise. We make every effort to ensure the accuracy of our product images, however due to different lighting and screens used for viewing, the colours may vary. Images are indicative of the quality and style of the product but may not represent the precise details of the product you receive. This is because we are constantly working to make improvements. For aesthetic reasons, cables and/or electrical elements are often not shown. Refer to technical data sheets for all technical data. Images and colours are not part of any contract or warranty in any way.

RF34046

Luce Orizzontale Suspension 3 Accessory kit set

RF3748400

Luce Orizzontale Suspension 3 Led board

RF3746200

Luce Orizzontale Ring and 4 mt wiring

RF3746300

Luce Orizzontale Closed glass difusser

RF3746400

Luce Orizzontale Open glass difusser

RF3748200

Luce Orizzontale Suspension 3 Linear diffuser

RF3750400

Luce Orizzontale Driver assembly

RF36893

Luce Orizzontale Ceiling rose dimmer

©2026 Flos - P.IVA 00290820174 - 3/11/2026

In our constantly evolving world and business, technical upgrades happen every day. This means all product specifications and data are subject to change without warning in order t improve reliability, function, performance or otherwise. We make every effort to ensure the accuracy of our product images, however due to different lighting and screens used for viewing, the colours may vary. Images are indicative of the quality and style of the product but may not represent the precise details of the product you receive. This is because we are constantly working to make improvements. For aesthetic reasons, cables and/or electrical elements are often not shown. Refer to technical data sheets for all technical data. Images and colours are not part of any contract or warranty in any way.

RF3748300

Luce Orizzontlae Suspension 3
White ceiling rose cover

©2026 Flos - P.IVA 00290820174 - 3/11/2026

In our constantly evolving world and business, technical upgrades happen every day. This means all product specifications and data are subject to change without warning in order t improve reliability, function, performance or otherwise. We make every effort to ensure the accuracy of our product images, however due to different lighting and screens used for viewing, the colours may vary. Images are indicative of the quality and style of the product but may not represent the precise details of the product you receive. This is because we are constantly working to make improvements. For aesthetic reasons, cables and/or electrical elements are often not shown. Refer to technical data sheets for all technical data. Images and colours are not part of any contract or warranty in any way.