FLOS

F3744000 Glass

# Luce Orizzontale S2

Designed by Ronan & Erwan Bouroullec, 2022

145W - 6682lm - 2700K - CRI> 95

Suspended lamp consisting of interconnected glass modules that reach a length of 1.66 mt. (S1) 2.07 mt. (S2) 2.49 mt. (S3) with 2.70 m suspended power cable. The cylindrical transparent glass modules are created through an artisanal process by pouring the glass into a rotating mold to obtain an exclusive finish that makes each single piece unique. Internal structure in polished extruded aluminum equipped with two linear LED modules for direct and indirect lighting downwards. The modules can be easily removed and replaced in case of maintenance. The power supply unit and the Dali Dimmer are located within the ceiling rose while a touch control button, positioned on one end of the product, allows the luminaire to be controlled in three different modes. Control options available: TOUCH_ Features direct control via the touch button on the lamp. This option allows to dim and adjust the light intensity of both the up and down emission (individually or combined) from 10% to 100%. PUSH&TOUCH_Features remote on/off control via Push button as well as dim and adjustability of the light tensity of both the up and down emission (individually or combined) from 10% to 100% through the touch button integrated on the lamp. DALI&TOUCH_ Features remote on/off control via DALI DT6 as well as dim and adjustability of the light tensity of both the up and down emission (individually or combined) from 10% to 100% through the touch button integrated on the lamp.

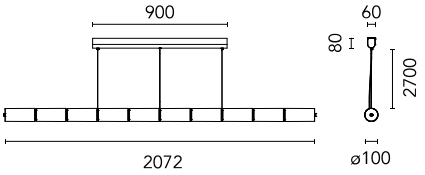


Are you a professional and your project needs consulting and support?

BOOK AN APPOINTMENT

## Download

Mounting instructions PDF

## Photometric Files

ULD ULD

## Technical Drawings

2D DWG

3D ZIP

Bim ULD



©2026 Flos - P.IVA 00290820174 - 3/11/2026



In our constantly evolving world and business, technical upgrades happen every day. This means all product specifications and data are subject to change without warning in order t improve reliability, function, performance or otherwise. We make every effort to ensure the accuracy of our product images, however due to different lighting and screens used for viewing, the colours may vary. Images are indicative of the quality and style of the product but may not represent the precise details of the product you receive. This is because we are constantly working to make improvements. For aesthetic reasons, cables and/or electrical elements are often not shown. Refer to technical data sheets for all technical data. Images and colours are not part of any contract or warranty in any way.

## Main specifications

| | |
|---|---|
| Mounting | Suspension |
| Environments | Indoor dry location |
| Light source type | LED |
| Light sources included | Yes |
| LED type | LED Module |
| Power (W) | 145 |
| Lumen Output (lm) | 6682 |

## Physical

| | |
|---|---|
| Colour | Glass |
| Length (mm) | 2072 |
| Cord colour | Clear |
| Cord length (mm) | 2700 |
| Canopy colour | White |
| Canopy length/diameter (mm) | 900 |
| Canopy width (mm) | 61 |
| Canopy height (mm) | 78 |
| Net weight (kg) | 34.5 |
| Package volume (m3) | 0.22 |
| IP internal | 20 |

## Ecodesign and Energy Labelling

This product contains a light source of energy efficiency class F

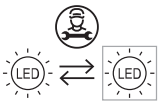


Replaceable (LED only) light source by a professional

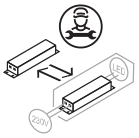


Replaceable control gear by a professional

## Photometric

| | |
|---|---|
| Light distribution | Symmetric |
| CCT (K) | 2700 |
| CRI> | 95 |
| Extreme cut off | No |

## Electrical

| | |
|---|---|
| Insulation class | I |
| Frequency (Hz) | 50/60 |
| Main voltage (Vac) | 100-240 |
| LED current (mA) | 600 |
| Power supply | Integrated |
| Dimmable | Yes |
| Power supply type | Dimmer on board |
| Dimming interface | Dimmer Integrated |



©2026 Flos - P.IVA 00290820174 - 3/11/2026



In our constantly evolving world and business, technical upgrades happen every day. This means all product specifications and data are subject to change without warning in order t improve reliability, function, performance or otherwise. We make every effort to ensure the accuracy of our product images, however due to different lighting and screens used for viewing, the colours may vary. Images are indicative of the quality and style of the product but may not represent the precise details of the product you receive. This is because we are constantly working to make improvements. For aesthetic reasons, cables and/or electrical elements are often not shown. Refer to technical data sheets for all technical data. Images and colours are not part of any contract or warranty in any way.

## Spare Parts

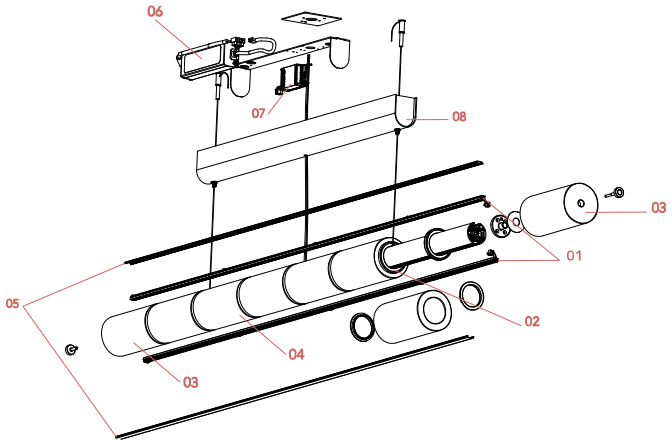


| | | |
|---|---|---|
| 00. | Luce Orizzontale Suspension 2 Accessories kit | RF34045 |
| 01. | Luce Orizzontale Suspension 2 Led board | RF3747300 |
| 02. | Luce Orizzontale Ring and 4 mt wiring | RF3746200 |
| 03. | Luce Orizzontale Closed glass difusser | RF3746300 |
| 04. | Luce Orizzontale Open glass difusser | RF3746400 |
| 05. | Luce Orizzontale Suspension 2 Linear diffuser | RF3747200 |
| 06. | Luce Orizzontale Driver assembly | RF3750400 |
| 07. | Luce Orizzontale Ceiling rose dimmer | RF36893 |
| 08. | Luce Orizzontale Suspension ½ Ceiling rose cover | RF3746600 |



©2026 Flos - P.IVA 00290820174 - 3/11/2026


In our constantly evolving world and business, technical upgrades happen every day. This means all product specifications and data are subject to change without warning in order t improve reliability, function, performance or otherwise. We make every effort to ensure the accuracy of our product images, however due to different lighting and screens used for viewing, the colours may vary. Images are indicative of the quality and style of the product but may not represent the precise details of the product you receive. This is because we are constantly working to make improvements. For aesthetic reasons, cables and/or electrical elements are often not shown. Refer to technical data sheets for all technical data. Images and colours are not part of any contract or warranty in any way.

RF34045

Luce Orizzontale Suspension 2 Accessories kit



RF3747300

Luce Orizzontale Suspension 2 Led board

RF3746200

Luce Orizzontale Ring and 4 mt wiring

RF3746300

Luce Orizzontale Closed glass difusser

RF3746400

Luce Orizzontale Open glass difusser



RF3747200

Luce Orizzontale Suspension 2 Linear diffuser

RF3750400

Luce Orizzontale Driver assembly

RF36893

Luce Orizzontale Ceiling rose dimmer



©2026 Flos - P.IVA 00290820174 - 3/11/2026



In our constantly evolving world and business, technical upgrades happen every day. This means all product specifications and data are subject to change without warning in order t improve reliability, function, performance or otherwise. We make every effort to ensure the accuracy of our product images, however due to different lighting and screens used for viewing, the colours may vary. Images are indicative of the quality and style of the product but may not represent the precise details of the product you receive. This is because we are constantly working to make improvements. For aesthetic reasons, cables and/or electrical elements are often not shown. Refer to technical data sheets for all technical data. Images and colours are not part of any contract or warranty in any way.

RF3746600

Luce Orizzontale Suspension ½
Ceiling rose cover



©2026 Flos - P.IVA 00290820174 - 3/11/2026



In our constantly evolving world and business, technical upgrades happen every day. This means all product specifications and data are subject to change without warning in order t improve reliability, function, performance or otherwise. We make every effort to ensure the accuracy of our product images, however due to different lighting and screens used for viewing, the colours may vary. Images are indicative of the quality and style of the product but may not represent the precise details of the product you receive. This is because we are constantly working to make improvements. For aesthetic reasons, cables and/or electrical elements are often not shown. Refer to technical data sheets for all technical data. Images and colours are not part of any contract or warranty in any way.