FLOS

F004E21A012 Forest Green

Landlord Spot Ø50 PWM Dimmable Forest Green

Designed by Piero Lissoni, 2018

Spot adjustable head for installation on ground poles or on wall base. Poles and base to be ordered as separated accessories. Heads are equipped with a dismountable ferrule, to insert flood lens or up to two honeycombs, (to be ordered as separate accessories). 24V remote power supply to be ordered separately. Each head comes with a 2000 mm lenght outgoing cable and a wiring kit.

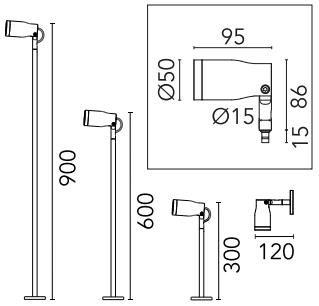

Are you a professional and your project needs consulting and support?

BOOK AN APPOINTMENT

Main specifications

EAN	8054793198965
Mounting	Ground
Environments	Outdoor wet location
Light source type	LED
Light sources included	Yes
LED type	Power LED
Number of lamps	1
Power (W)	3
Lumen Output (lm)	135

Physical

Colour	Forest Green
Trim	No
Orientation	Adjustable
Rotation (°)	359
Transversal tilting (°)	120
Net weight (kg)	0.19
Package height (mm)	87
Package width (mm)	137
Package length (mm)	142
IP internal	66

Download

Mounting instructions ZIP

Photometric Files

LDT / IES ZIP

Technical Drawings

2D	ZIP
3D	ZIP
Bim	ZIP

RG IEC 62471

©2026 Flos - P.IVA 00290820174 - 3/6/2026

In our constantly evolving world and business, technical upgrades happen every day. This means all product specifications and data are subject to change without warning in order t improve reliability, function, performance or otherwise. We make every effort to ensure the accuracy of our product images, however due to different lighting and screens used for viewing, the colours may vary. Images are indicative of the quality and style of the product but may not represent the precise details of the product you receive. This is because we are constantly working to make improvements. For aesthetic reasons, cables and/or electrical elements are often not shown. Refer to technical data sheets for all technical data. Images and colours are not part of any contract or warranty in any way.

Schematic light drawing

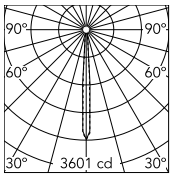

Luminous flux luminaire
135 lm

Beam Angle: 8°

h(m)	E(lx)	D(m)
1	3601	0.14
2	900	0.28
3	400	0.41
4	225	0.55
5	144	0.69

Ecodesign and Energy Labelling

This product contains a light source of energy efficiency class E

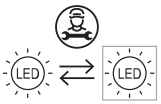

Replaceable (LED only) light source by a professional

Photometric

Light distribution	Symmetric
CCT (K)	2700
CRI>	80
Beam angle C0-180 (°)	7
Beam angle C90-270 (°)	7

Electrical

Insulation class	III
Main voltage (Vac)	24
Power supply	Remote excluded
Dimmable	Yes
Power supply type	Non Dimmable, Dimmable DALI PWM, Dimmable 1-10 PWM
Dimming interface	Remote Dimmable (Dimmer Not Included)
Emergency	No

Notes

During the installation and the maintenance of the fixtures it is important to be careful and avoid damages on the paint coating.
Damages on the coating exposed to outdoor conditions or water, could cause corrosion.
Chemical substances affect the anticorrosion covering protection.
For LED fixtures, there is evidence that most of the damages are connected to electrical effects related to the insulations, which cause destructive electrical discharges
These effects are frequently caused by:
• over voltage coming from the mains' network where fixture is connected.
• electrostatic discharge (ESD) coming from the environment.
The use of a protective device against the overvoltage on the electrical installation is warmly suggest this helps to reduce the intensity of some of these phenomenon and prevent irreversible damages. The selection of the type of device to be used must be adjust on the electrical plant.

©2026 Flos - P.IVA 00290820174 - 3/6/2026

In our constantly evolving world and business, technical upgrades happen every day. This means all product specifications and data are subject to change without warning in order t improve reliability, function, performance or otherwise. We make every effort to ensure the accuracy of our product images, however due to different lighting and screens used for viewing, the colours may vary. Images are indicative of the quality and style of the product but may not represent the precise details of the product you receive. This is because we are constantly working to make improvements. For aesthetic reasons, cables and/or electrical elements are often not shown. Refer to technical data sheets for all technical data. Images and colours are not part of any contract or warranty in any way.

Accessories & Power Supply

REQUIRED
Power supply

RF25757

Power supply 24V 10W / 110-240V IP67 Class II selv._Non Dimmable

REQUIRED
Power supply

F990B03A000

POWER SUPPLY 24V PWM WITH DALI CONTROL INTERFACE IP67 CLASS II. Vin 120-270Vac 35W

REQUIRED

F990B34A000

Power Supply dual function C.V. Vout 24Vdc 8W, Vin 220÷240V C.C. Iout 350mA: 8W, Vin 220÷240V IP 20 Class II Selv. NON Dimmable

REQUIRED
Power supply

F990B02A000

POWER SUPPLY 24V PWM WITH 1..10V CONTROL INTERFACE IP67 CLASS II. Vin 120-270Vac 35W

REQUIRED
Accessory

F004Z020012

Pole with base H 600 mm Forest Green

REQUIRED
Accessory

F004Z030012

Pole with base H 900 mm Forest Green

REQUIRED
Accessory

F004Z010012

Pole with base H 300 mm Forest Green

REQUIRED
Power supply

F990B17A000

POWER SUPPLY 24V PWM WITH PUSH CONTROL INTERFACE IP67 CLASS II. Vin 120-270Vac 70W

©2026 Flos - P.IVA 00290820174 - 3/6/2026

In our constantly evolving world and business, technical upgrades happen every day. This means all product specifications and data are subject to change without warning in order t improve reliability, function, performance or otherwise. We make every effort to ensure the accuracy of our product images, however due to different lighting and screens used for viewing, the colours may vary. Images are indicative of the quality and style of the product but may not represent the precise details of the product you receive. This is because we are constantly working to make improvements. For aesthetic reasons, cables and/or electrical elements are often not shown. Refer to technical data sheets for all technical data. Images and colours are not part of any contract or warranty in any way.

REQUIRED
Accessory

F004Z040012

Wall base Forest Green

REQUIRED
Power supply

F990B28A000

Power supply 24Vdc 50W / 220-240V IP67 Class I selv. Non Dimmable

REQUIRED
Power supply

F990B16A000

POWER SUPPLY 24V PWM WITH PUSH CONTROL INTERFACE IP67 CLASS II. Vin 120-270Vac 35W

REQUIRED
Power supply

F990B27A000

Power supply 24Vdc 70W / 220-240V IP67 Class I selv. Non Dimmable

REQUIRED
Power supply

RF25747

Power supply 24V 10W /110-240V IP20 Class II selv. Non Dimmable

REQUIRED
Power supply

RF25748

Power Supply dual function C.V. Vout 24Vdc 8W, Vin 220÷240V C.C. Iout 350mA: 8W, Vin 220÷240V IP 65 Class II Selv. NON Dimmable

REQUIRED
Power supply

F990B05A000

POWER SUPPLY 24V PWM WITH DALI CONTROL INTERFACE IP67 CLASS II. Vin 120-270Vac 70W

REQUIRED
Power supply

F990B23AZ00

Power supply 24Vdc 35W /120-270V IP67 Class II selv.

©2026 Flos - P.IVA 00290820174 - 3/6/2026

In our constantly evolving world and business, technical upgrades happen every day. This means all product specifications and data are subject to change without warning in order t improve reliability, function, performance or otherwise. We make every effort to ensure the accuracy of our product images, however due to different lighting and screens used for viewing, the colours may vary. Images are indicative of the quality and style of the product but may not represent the precise details of the product you receive. This is because we are constantly working to make improvements. For aesthetic reasons, cables and/or electrical elements are often not shown. Refer to technical data sheets for all technical data. Images and colours are not part of any contract or warranty in any way.

REQUIRED
Power supply

F990B01A000

CONTROL INTERFACE 24V PWM - DALI IP67 CLASS III. Vin 24Vdc 120W (POWER SUPPLY NOT INCLUDED)

REQUIRED
Power supply

F990B00A000

CONTROL INTERFACE 24V PWM - 1..10V IP67 CLASS III. VIN 24Vdc 120W (POWER SUPPLY NOT INCLUDED)

REQUIRED
Power supply

F990B04A000

POWER SUPPLY 24V PWM WITH 1..10V CONTROL INTERFACE IP67 CLASS II. Vin 120-270Vac 70W

OPTIONAL
Accessory

F990C00A000

2 way terminal block 4 poles IP68 H20 stop. (ø5,5÷12mm cable)

OPTIONAL
Accessory

F990C010000

3/4 way terminal block 4 poles IP68 H2O stop. (ø5,5÷12mm cable)

OPTIONAL
Accessory

F004Z0L0000

Honeycomb

OPTIONAL
Accessory

F004Z0H0000

Flood lens

OPTIONAL
Accessory

F004Z070000

Tree strap

©2026 Flos - P.IVA 00290820174 - 3/6/2026

In our constantly evolving world and business, technical upgrades happen every day. This means all product specifications and data are subject to change without warning in order t improve reliability, function, performance or otherwise. We make every effort to ensure the accuracy of our product images, however due to different lighting and screens used for viewing, the colours may vary. Images are indicative of the quality and style of the product but may not represent the precise details of the product you receive. This is because we are constantly working to make improvements. For aesthetic reasons, cables and/or electrical elements are often not shown. Refer to technical data sheets for all technical data. Images and colours are not part of any contract or warranty in any way.

OPTIONAL
Accessory

F004Z060000

Earth stick

©2026 Flos - P.IVA 00290820174 - 3/6/2026

In our constantly evolving world and business, technical upgrades happen every day. This means all product specifications and data are subject to change without warning in order t improve reliability, function, performance or otherwise. We make every effort to ensure the accuracy of our product images, however due to different lighting and screens used for viewing, the colours may vary. Images are indicative of the quality and style of the product but may not represent the precise details of the product you receive. This is because we are constantly working to make improvements. For aesthetic reasons, cables and/or electrical elements are often not shown. Refer to technical data sheets for all technical data. Images and colours are not part of any contract or warranty in any way.