FLOS

F6263000 Transparent

KTribe Table 1

Designed by Philippe Starck, 2007

Halogen - 100W

Table luminaire providing diffused lighting. Base, rod support and diffuser support in die-cast, polished Zamak alloy. Polished aluminum tubular. Injection-molded, matte black PA (Nylon) base cover. Injection-molded PC (polycarbonate) opal inner diffuser. Outer diffuser in transparent or fumée PMMA (polymethylmethacrylate).

Are you a professional and your project needs consulting and support?

BOOK AN APPOINTMENT

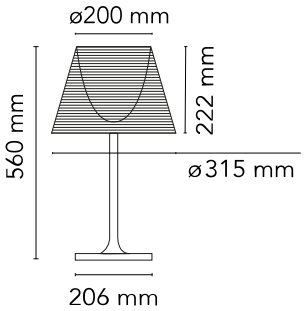

Main specifications

Mounting	Table
Environments	Indoor dry location
Light source type	Bulb
Light sources included	No
Lamp category	Halogen
Lamp holders	E27
Ilcos	HSGS
Number of lamps	1
Power (W)	100

Physical

Colour	Transparent
Length (mm)	315
Cord colour	Black
Cord length (mm)	1640
Net weight (kg)	3.13
Package volume (m3)	0.1
IP internal	20

Download

Mounting instructions PDF

Photometric Files

LDT / IES LDT

Technical Drawings

2D ZIP

3D ZIP

©2026 Flos - P.IVA 00290820174 - 3/6/2026

In our constantly evolving world and business, technical upgrades happen every day. This means all product specifications and data are subject to change without warning in order t improve reliability, function, performance or otherwise. We make every effort to ensure the accuracy of our product images, however due to different lighting and screens used for viewing, the colours may vary. Images are indicative of the quality and style of the product but may not represent the precise details of the product you receive. This is because we are constantly working to make improvements. For aesthetic reasons, cables and/or electrical elements are often not shown. Refer to technical data sheets for all technical data. Images and colours are not part of any contract or warranty in any way.

Schematic light drawing

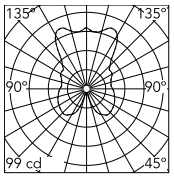

Luminous flux luminaire
1200 lm

Photometric

Lighting type	Direct, Indirect
Light distribution	Symmetric
Extreme cut off	No

Electrical

Insulation class	II
Frequency (Hz)	50/60
Main voltage (Vac)	220-240
Dimmable	Yes
Dimming interface	Dimmer Integrated
Plug type	Type C
Batteries inside	No

©2026 Flos - P.IVA 00290820174 - 3/6/2026

In our constantly evolving world and business, technical upgrades happen every day. This means all product specifications and data are subject to change without warning in order t improve reliability, function, performance or otherwise. We make every effort to ensure the accuracy of our product images, however due to different lighting and screens used for viewing, the colours may vary. Images are indicative of the quality and style of the product but may not represent the precise details of the product you receive. This is because we are constantly working to make improvements. For aesthetic reasons, cables and/or electrical elements are often not shown. Refer to technical data sheets for all technical data. Images and colours are not part of any contract or warranty in any way.

Bulbs

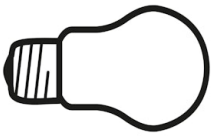

NOT INCLUDED

RF32563

LED Lamp 11.5W E27 220-240V
2700K A70

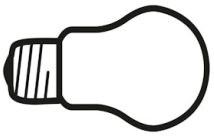

NOT INCLUDED

RF32564

LED Lamp 11.5W E27 220-240V
3000K A70

©2026 Flos - P.IVA 00290820174 - 3/6/2026

In our constantly evolving world and business, technical upgrades happen every day. This means all product specifications and data are subject to change without warning in order t improve reliability, function, performance or otherwise. We make every effort to ensure the accuracy of our product images, however due to different lighting and screens used for viewing, the colours may vary. Images are indicative of the quality and style of the product but may not represent the precise details of the product you receive. This is because we are constantly working to make improvements. For aesthetic reasons, cables and/or electrical elements are often not shown. Refer to technical data sheets for all technical data. Images and colours are not part of any contract or warranty in any way.

Spare Parts

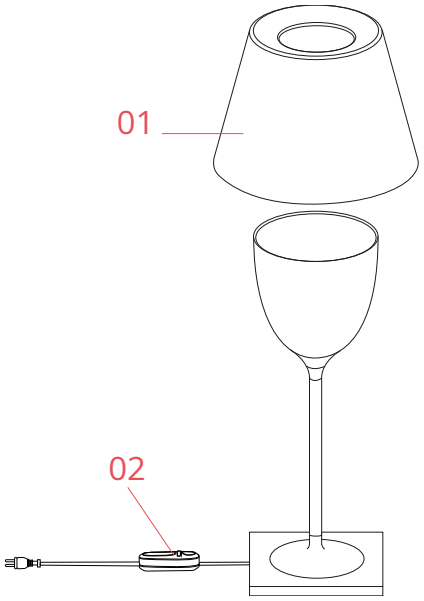

01.	Ktribe Table 1 transparent diffuser assembly	F6264000
02.	Black Dimmer Switch	RF28206

©2026 Flos - P.IVA 00290820174 - 3/6/2026

In our constantly evolving world and business, technical upgrades happen every day. This means all product specifications and data are subject to change without warning in order t improve reliability, function, performance or otherwise. We make every effort to ensure the accuracy of our product images, however due to different lighting and screens used for viewing, the colours may vary. Images are indicative of the quality and style of the product but may not represent the precise details of the product you receive. This is because we are constantly working to make improvements. For aesthetic reasons, cables and/or electrical elements are often not shown. Refer to technical data sheets for all technical data. Images and colours are not part of any contract or warranty in any way.

F6264000

Ktribe Table 1 transparent diffuser assembly

RF28206

Black Dimmer Switch

©2026 Flos - P.IVA 00290820174 - 3/6/2026

In our constantly evolving world and business, technical upgrades happen every day. This means all product specifications and data are subject to change without warning in order t improve reliability, function, performance or otherwise. We make every effort to ensure the accuracy of our product images, however due to different lighting and screens used for viewing, the colours may vary. Images are indicative of the quality and style of the product but may not represent the precise details of the product you receive. This is because we are constantly working to make improvements. For aesthetic reasons, cables and/or electrical elements are often not shown. Refer to technical data sheets for all technical data. Images and colours are not part of any contract or warranty in any way.