FLOS

F3154044 24K Gold

IC T3 10 Anniversary

Designed by Michael Anastassiades, 2024

LED retrofit - 25W

Table lamp providing diffused light. Gold plate 24 carat frame. Blown glass opal diffuser. Dimmer on the power chord.

Are you a professional and your project needs consulting and support?

BOOK AN APPOINTMENT

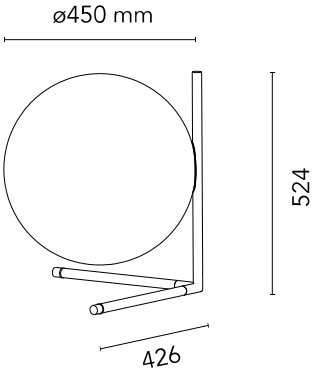

Main specifications

EAN	8059607068267
Mounting	Table
Environments	Indoor dry location
Light source type	Bulb
Light sources included	Yes
Lamp category	LED retrofit
Lamp holders	E27
Bulb finish	Opal
Number of lamps	1
Power (W)	25

Physical

Colour	24K Gold
Length (mm)	480
Cord colour	Black
Cord length (mm)	2000
Net weight (kg)	7.4
Package volume (m3)	0.22
IP internal	20

Download

Mounting instructions PDF

Photometric Files

LDT / IES ZIP

Technical Drawings

2D ZIP

3D ZIP

Ecodesign and Energy Labelling

This product contains a light source of energy efficiency class D

©2026 Flos - P.IVA 00290820174 - 3/10/2026

In our constantly evolving world and business, technical upgrades happen every day. This means all product specifications and data are subject to change without warning in order t improve reliability, function, performance or otherwise. We make every effort to ensure the accuracy of our product images, however due to different lighting and screens used for viewing, the colours may vary. Images are indicative of the quality and style of the product but may not represent the precise details of the product you receive. This is because we are constantly working to make improvements. For aesthetic reasons, cables and/or electrical elements are often not shown. Refer to technical data sheets for all technical data. Images and colours are not part of any contract or warranty in any way.

Schematic light drawing

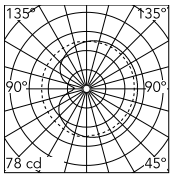

Luminous flux luminaire
3515 lm

Photometric

Lighting type	Direct, Indirect
Light distribution	Asymmetric

Electrical

Insulation class	I
Frequency (Hz)	50/60
Main voltage (Vac)	220-240
Dimmable	Yes
Dimming interface	Dimmer Integrated
Plug type	Type C
Batteries inside	No

©2026 Flos - P.IVA 00290820174 - 3/10/2026

In our constantly evolving world and business, technical upgrades happen every day. This means all product specifications and data are subject to change without warning in order t improve reliability, function, performance or otherwise. We make every effort to ensure the accuracy of our product images, however due to different lighting and screens used for viewing, the colours may vary. Images are indicative of the quality and style of the product but may not represent the precise details of the product you receive. This is because we are constantly working to make improvements. For aesthetic reasons, cables and/or electrical elements are often not shown. Refer to technical data sheets for all technical data. Images and colours are not part of any contract or warranty in any way.

Bulbs

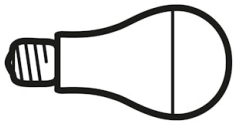

INCLUDED

RF36503

LED 25W E27 3700lm 2700K 240°
DIMMER

©2026 Flos - P.IVA 00290820174 - 3/10/2026

In our constantly evolving world and business, technical upgrades happen every day. This means all product specifications and data are subject to change without warning in order t improve reliability, function, performance or otherwise. We make every effort to ensure the accuracy of our product images, however due to different lighting and screens used for viewing, the colours may vary. Images are indicative of the quality and style of the product but may not represent the precise details of the product you receive. This is because we are constantly working to make improvements. For aesthetic reasons, cables and/or electrical elements are often not shown. Refer to technical data sheets for all technical data. Images and colours are not part of any contract or warranty in any way.

Spare Parts

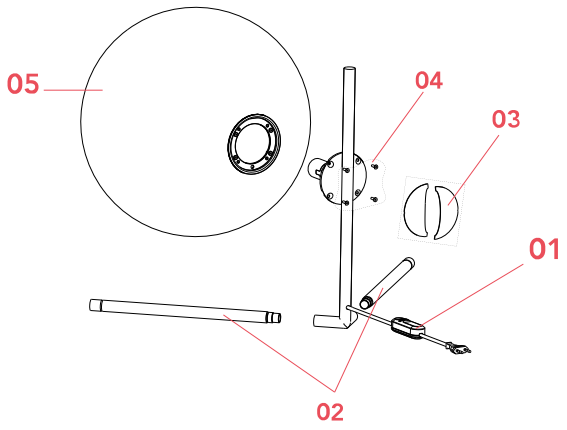

00.	IC T3 Or ring	RF31770
01.	Black Dimmer Switch	RF28206
02.	IC T3 Lower gold leg	RF3154044
03.	IC T/S 3 Fixed flange semi-cover for gold diffuser	RF36483
04.	IC T/S 3 Kit of screws and allen key	RF3154100
05.	IC 3 White/gold diffuser	F3153044

©2026 Flos - P.IVA 00290820174 - 3/10/2026

In our constantly evolving world and business, technical upgrades happen every day. This means all product specifications and data are subject to change without warning in order t improve reliability, function, performance or otherwise. We make every effort to ensure the accuracy of our product images, however due to different lighting and screens used for viewing, the colours may vary. Images are indicative of the quality and style of the product but may not represent the precise details of the product you receive. This is because we are constantly working to make improvements. For aesthetic reasons, cables and/or electrical elements are often not shown. Refer to technical data sheets for all technical data. Images and colours are not part of any contract or warranty in any way.

RF31770

IC T3 Or ring

RF28206

Black Dimmer Switch

RF3154044

IC T3 Lower gold leg

RF36483

IC T/S 3 Fixed flange semi-cover for gold diffuser

RF3154100

IC T/S 3 Kit of screws and allen key

F3153044

IC 3 White/gold diffuser

©2026 Flos - P.IVA 00290820174 - 3/10/2026

In our constantly evolving world and business, technical upgrades happen every day. This means all product specifications and data are subject to change without warning in order t improve reliability, function, performance or otherwise. We make every effort to ensure the accuracy of our product images, however due to different lighting and screens used for viewing, the colours may vary. Images are indicative of the quality and style of the product but may not represent the precise details of the product you receive. This is because we are constantly working to make improvements. For aesthetic reasons, cables and/or electrical elements are often not shown. Refer to technical data sheets for all technical data. Images and colours are not part of any contract or warranty in any way.