FLOS

F3151044 24K Gold

# IC S3 10 Anniversary

Designed by Michael Anastassiades, 2024

LED retrofit - 25W

Suspension lamp providing diffused light. Gold plate 24 carat frame. Blown glass opal diffuser.

Are you a professional and your project needs consulting and support?

BOOK AN APPOINTMENT

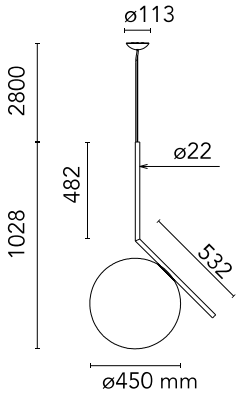


## Main specifications

| | |
|---|---|
| EAN | 8059607067444 |
| Mounting | Suspension |
| Environments | Indoor dry location |
| Light source type | Bulb |
| Light sources included | Yes |
| Lamp category | LED retrofit |
| Lamp holders | E27 |
| Ilcos | HSGS |
| Bulb finish | Opal |
| Number of lamps | 1 |
| Power (W) | 25 |

## Physical

| | |
|---|---|
| Colour | 24K Gold |
| Length (mm) | 650 |
| Cord colour | Black |
| Cord length (mm) | 2800 |
| Canopy colour | 24K Gold |
| Canopy length/diameter (mm) | 113 |
| Canopy height (mm) | 36 |
| Net weight (kg) | 7 |
| Package volume (m3) | 0.25 |
| IP internal | 20 |

## Download

Mounting instructions PDF

## Photometric Files

LDT / IES ZIP

## Technical Drawings

2D ZIP

3D ZIP

## Ecodesign and Energy Labelling

This product contains a light source of energy efficiency class D



©2026 Flos - P.IVA 00290820174 - 3/10/2026



In our constantly evolving world and business, technical upgrades happen every day. This means all product specifications and data are subject to change without warning in order t improve reliability, function, performance or otherwise. We make every effort to ensure the accuracy of our product images, however due to different lighting and screens used for viewing, the colours may vary. Images are indicative of the quality and style of the product but may not represent the precise details of the product you receive. This is because we are constantly working to make improvements. For aesthetic reasons, cables and/or electrical elements are often not shown. Refer to technical data sheets for all technical data. Images and colours are not part of any contract or warranty in any way.

## Schematic light drawing

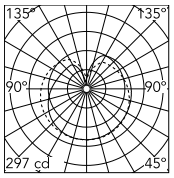


Luminous flux luminaire
3515 lm

## Photometric

| | |
|---|---|
| Lighting type | Direct, Indirect |
| Extreme cut off | No |

## Electrical

| | |
|---|---|
| Insulation class | I |
| Frequency (Hz) | 50/60 |
| Main voltage (Vac) | 220-250 |
| Dimmable | Yes |
| Dimming interface | Remote Dimmable (Dimmer Not Included) |
| Batteries inside | No |



©2026 Flos - P.IVA 00290820174 - 3/10/2026



In our constantly evolving world and business, technical upgrades happen every day. This means all product specifications and data are subject to change without warning in order t improve reliability, function, performance or otherwise. We make every effort to ensure the accuracy of our product images, however due to different lighting and screens used for viewing, the colours may vary. Images are indicative of the quality and style of the product but may not represent the precise details of the product you receive. This is because we are constantly working to make improvements. For aesthetic reasons, cables and/or electrical elements are often not shown. Refer to technical data sheets for all technical data. Images and colours are not part of any contract or warranty in any way.

# Bulbs

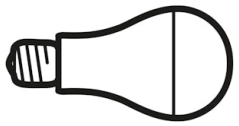

INCLUDED

RF36503

LED 25W E27 3700lm 2700K 240°
DIMMER



©2026 Flos - P.IVA 00290820174 - 3/10/2026



In our constantly evolving world and business, technical upgrades happen every day. This means all product specifications and data are subject to change without warning in order t improve reliability, function, performance or otherwise. We make every effort to ensure the accuracy of our product images, however due to different lighting and screens used for viewing, the colours may vary. Images are indicative of the quality and style of the product but may not represent the precise details of the product you receive. This is because we are constantly working to make improvements. For aesthetic reasons, cables and/or electrical elements are often not shown. Refer to technical data sheets for all technical data. Images and colours are not part of any contract or warranty in any way.

## Spare Parts

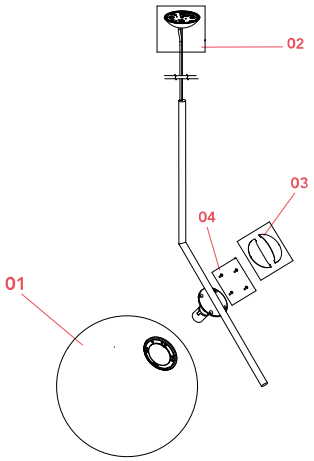


| | | |
|---|---|---|
| 01. | IC 3 White/gold diffuser | F3153044 |
| 02. | IC S3 Gold ceiling rose EU | RF3152044 |
| 03. | IC T/S 3 Fixed flange semi-cover for gold diffuser | RF36483 |
| 04. | IC T/S 3 Kit of screws and allen key | RF3154100 |



©2026 Flos - P.IVA 00290820174 - 3/10/2026



In our constantly evolving world and business, technical upgrades happen every day. This means all product specifications and data are subject to change without warning in order t improve reliability, function, performance or otherwise. We make every effort to ensure the accuracy of our product images, however due to different lighting and screens used for viewing, the colours may vary. Images are indicative of the quality and style of the product but may not represent the precise details of the product you receive. This is because we are constantly working to make improvements. For aesthetic reasons, cables and/or electrical elements are often not shown. Refer to technical data sheets for all technical data. Images and colours are not part of any contract or warranty in any way.

F3153044

IC 3 White/gold diffuser

FLOS

RF3152044

IC S3 Gold ceiling rose EU

RF36483

IC T/S 3 Fixed flange semi-cover for gold diffuser

RF3154100

IC T/S 3 Kit of screws and allen key



©2026 Flos - P.IVA 00290820174 - 3/10/2026



In our constantly evolving world and business, technical upgrades happen every day. This means all product specifications and data are subject to change without warning in order t improve reliability, function, performance or otherwise. We make every effort to ensure the accuracy of our product images, however due to different lighting and screens used for viewing, the colours may vary. Images are indicative of the quality and style of the product but may not represent the precise details of the product you receive. This is because we are constantly working to make improvements. For aesthetic reasons, cables and/or electrical elements are often not shown. Refer to technical data sheets for all technical data. Images and colours are not part of any contract or warranty in any way.