FLOS

F3171059 Brass

IC Lights T1 Low

Designed by Michael Anastassiades, 2014

Halogen - 60W

Table lamp providing diffused light. Frame in brass, black or chrome steel. Blown glass opal diffuser. Dimmer on the power chord.

Are you a professional and your project needs consulting and support?

BOOK AN APPOINTMENT

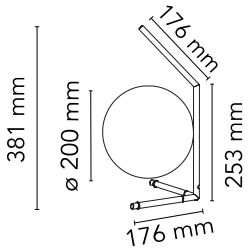

Main specifications

EAN	8059607002803
Mounting	Table
Environments	Indoor dry location
Light source type	Bulb
Light sources included	No
Lamp category	Halogen
Lamp holders	E14
Ilcos	HSGS
Number of lamps	1
Power (W)	60

Physical

Colour	Brass
Length (mm)	200
Cord colour	Black
Net weight (kg)	1.2
Package volume (m3)	0.04
IP internal	20

Download

Mounting instructions PDF

Photometric Files

LDT / IES LDT

Technical Drawings

2D ZIP

3D ZIP

Bim ZIP

©2026 Flos - P.IVA 00290820174 - 3/10/2026

In our constantly evolving world and business, technical upgrades happen every day. This means all product specifications and data are subject to change without warning in order t improve reliability, function, performance or otherwise. We make every effort to ensure the accuracy of our product images, however due to different lighting and screens used for viewing, the colours may vary. Images are indicative of the quality and style of the product but may not represent the precise details of the product you receive. This is because we are constantly working to make improvements. For aesthetic reasons, cables and/or electrical elements are often not shown. Refer to technical data sheets for all technical data. Images and colours are not part of any contract or warranty in any way.

Schematic light drawing

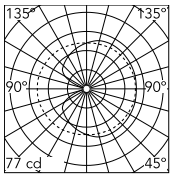

Luminous flux luminaire
689 lm

Photometric

Lighting type	Total
Light distribution	Asymmetric
Extreme cut off	No

Electrical

Insulation class	II
Frequency (Hz)	50/60
Main voltage (Vac)	220-240
Dimmable	Yes
Dimming interface	Dimmer Integrated
Plug type	Type C
Batteries inside	No

©2026 Flos - P.IVA 00290820174 - 3/10/2026

In our constantly evolving world and business, technical upgrades happen every day. This means all product specifications and data are subject to change without warning in order t improve reliability, function, performance or otherwise. We make every effort to ensure the accuracy of our product images, however due to different lighting and screens used for viewing, the colours may vary. Images are indicative of the quality and style of the product but may not represent the precise details of the product you receive. This is because we are constantly working to make improvements. For aesthetic reasons, cables and/or electrical elements are often not shown. Refer to technical data sheets for all technical data. Images and colours are not part of any contract or warranty in any way.

Bulbs

NOT INCLUDED

RF32290

LED Lamp E14 8W 2700K T28

NOT INCLUDED

RF32291

LED Lamp E14 8W 3000K T28

NOT INCLUDED

RF37192

LED Lamp 7,5W E14 220-240V 2700K T28

NOT INCLUDED

RF37193

LED Lamp 7,5W E14 220-240V 3000K T28

©2026 Flos - P.IVA 00290820174 - 3/10/2026

In our constantly evolving world and business, technical upgrades happen every day. This means all product specifications and data are subject to change without warning in order t improve reliability, function, performance or otherwise. We make every effort to ensure the accuracy of our product images, however due to different lighting and screens used for viewing, the colours may vary. Images are indicative of the quality and style of the product but may not represent the precise details of the product you receive. This is because we are constantly working to make improvements. For aesthetic reasons, cables and/or electrical elements are often not shown. Refer to technical data sheets for all technical data. Images and colours are not part of any contract or warranty in any way.

Spare Parts

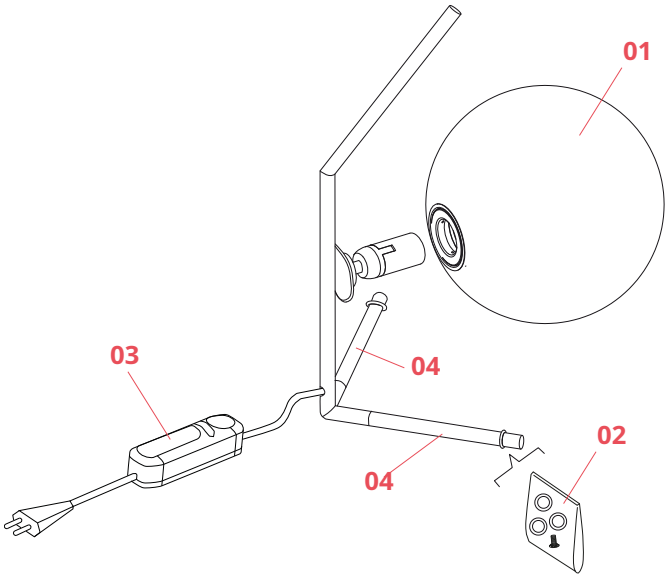

01.	IC Lights 1 diffuser for brass version	F3136059
02.	Gasket and foot kit for ic high-low	RF3160400
03.	Black Dimmer Switch	RF28206
04.	Ic Table 1 Lower brass leg	RF23317

©2026 Flos - P.IVA 00290820174 - 3/10/2026

In our constantly evolving world and business, technical upgrades happen every day. This means all product specifications and data are subject to change without warning in order t improve reliability, function, performance or otherwise. We make every effort to ensure the accuracy of our product images, however due to different lighting and screens used for viewing, the colours may vary. Images are indicative of the quality and style of the product but may not represent the precise details of the product you receive. This is because we are constantly working to make improvements. For aesthetic reasons, cables and/or electrical elements are often not shown. Refer to technical data sheets for all technical data. Images and colours are not part of any contract or warranty in any way.

F3136059

IC Lights 1 diffuser for brass version

RF3160400

Gasket and foot kit for ic high-low

RF28206

Black Dimmer Switch

RF23317

Ic Table 1 Lower brass leg

©2026 Flos - P.IVA 00290820174 - 3/10/2026

In our constantly evolving world and business, technical upgrades happen every day. This means all product specifications and data are subject to change without warning in order t improve reliability, function, performance or otherwise. We make every effort to ensure the accuracy of our product images, however due to different lighting and screens used for viewing, the colours may vary. Images are indicative of the quality and style of the product but may not represent the precise details of the product you receive. This is because we are constantly working to make improvements. For aesthetic reasons, cables and/or electrical elements are often not shown. Refer to technical data sheets for all technical data. Images and colours are not part of any contract or warranty in any way.