FLOS

F012H00C055 Brushed Stainless Steel

IC C/W1 Outdoor

Designed by Michael Anastassiades, 2019

Light source excluded. Optional LED bulb sold separately. Wall mounting system contains the wiring system. Watertight cable gland included.

Are you a professional and your project needs consulting and support?

BOOK AN APPOINTMENT

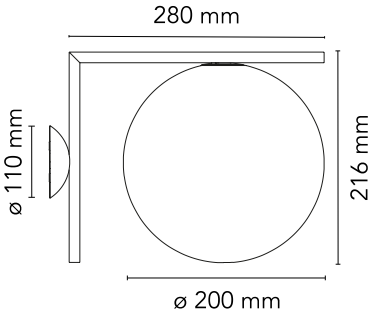

Main specifications

EAN	8054793222028
Mounting	Ceiling, Wall
Environments	Outdoor wet location
Light source type	Bulb
Light sources included	No
Number of lamps	1

Physical

Colour	Brushed Stainless Steel
Trim	No
Orientation	Fixed
Net weight (kg)	4.49
IP internal	65

Download

Mounting instructions ZIP

Photometric Files

LDT / IES ZIP

Technical Drawings

2D ZIP

3D ZIP

Bim ZIP

Schematic light drawing

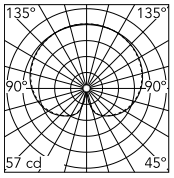

Luminous flux luminaire 700 lm

Beam Angle: 0°

h(m)	E(lx)	D(m)
1	57	
2	14	
3	6	
4	4	
5	0	

Ecodesign and Energy Labelling

Replaceable (LED only) light source by an end-user

©2026 Flos - P.IVA 00290820174 - 3/10/2026

In our constantly evolving world and business, technical upgrades happen every day. This means all product specifications and data are subject to change without warning in order t improve reliability, function, performance or otherwise. We make every effort to ensure the accuracy of our product images, however due to different lighting and screens used for viewing, the colours may vary. Images are indicative of the quality and style of the product but may not represent the precise details of the product you receive. This is because we are constantly working to make improvements. For aesthetic reasons, cables and/or electrical elements are often not shown. Refer to technical data sheets for all technical data. Images and colours are not part of any contract or warranty in any way.

Photometric

Lighting type	Direct
Light distribution	Symmetric
Extreme cut off	No

Electrical

Insulation class	I
Frequency (Hz)	50/60
Main voltage (Vac)	220-240
Emergency	No

Notes

Bulb not included. LED: max 8W - E14

©2026 Flos - P.IVA 00290820174 - 3/10/2026

In our constantly evolving world and business, technical upgrades happen every day. This means all product specifications and data are subject to change without warning in order t improve reliability, function, performance or otherwise. We make every effort to ensure the accuracy of our product images, however due to different lighting and screens used for viewing, the colours may vary. Images are indicative of the quality and style of the product but may not represent the precise details of the product you receive. This is because we are constantly working to make improvements. For aesthetic reasons, cables and/or electrical elements are often not shown. Refer to technical data sheets for all technical data. Images and colours are not part of any contract or warranty in any way.

Bulbs

NOT INCLUDED

RF32290

LED Lamp E14 8W 2700K T28

NOT INCLUDED

RF32291

LED Lamp E14 8W 3000K T28

©2026 Flos - P.IVA 00290820174 - 3/10/2026

In our constantly evolving world and business, technical upgrades happen every day. This means all product specifications and data are subject to change without warning in order t improve reliability, function, performance or otherwise. We make every effort to ensure the accuracy of our product images, however due to different lighting and screens used for viewing, the colours may vary. Images are indicative of the quality and style of the product but may not represent the precise details of the product you receive. This is because we are constantly working to make improvements. For aesthetic reasons, cables and/or electrical elements are often not shown. Refer to technical data sheets for all technical data. Images and colours are not part of any contract or warranty in any way.