FLOS

F1854033 Argent

Coordinates Suspension 4

Designed by Michael Anastassiades, 2020

161W - 8830lm - 2700K - CRI> 95

Coordinates is a lighting system with diffuse light composed of horizontal and vertical luminaries arranged in a bright grid of various shapes and complexities. Each element is made of extruded anodized aluminium with a champagne or argent finish and a diffuser in platinum optical silicone with an integrated LED strip (CRI 95). Each element is powered and supported by an invisible electrical and mechanical connection designed specifically to allow for the composition of the 4 hanging models (S3, S4) with 2.4-m cables. Each Coordinates configuration includes its own ceiling rose, whose integrated electronics allow for the use of different dimmer systems: push, 1-10, DALI. In the absence of these systems, the amount of light can be set during installation with the push system included in the rose.

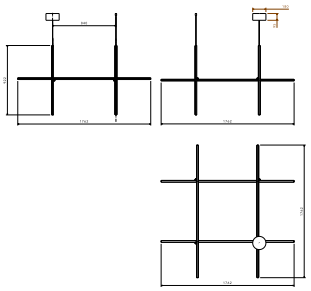

Are you a professional and your project needs consulting and support?

BOOK AN APPOINTMENT

Download

Mounting instructions PDF

Photometric Files

ULD ZIP

Technical Drawings

3D ZIP

Bim ZIP

Main specifications

EAN	8059607038383
Mounting	Suspension
Environments	Indoor dry location
Light source type	LED
Light sources included	Yes
LED type	LED Module
Power (W)	161
Lumen Output (lm)	8830

Physical

Colour	Argent
Length (mm)	1762
Cord colour	Clear
Cord length (mm)	2400
Canopy colour	Argent
Canopy length/diameter (mm)	181
Canopy height (mm)	95
Net weight (kg)	7.9
Package volume (m3)	0.06
IP internal	20

©2026 Flos - P.IVA 00290820174 - 3/6/2026

In our constantly evolving world and business, technical upgrades happen every day. This means all product specifications and data are subject to change without warning in order t improve reliability, function, performance or otherwise. We make every effort to ensure the accuracy of our product images, however due to different lighting and screens used for viewing, the colours may vary. Images are indicative of the quality and style of the product but may not represent the precise details of the product you receive. This is because we are constantly working to make improvements. For aesthetic reasons, cables and/or electrical elements are often not shown. Refer to technical data sheets for all technical data. Images and colours are not part of any contract or warranty in any way.

Photometric

Lighting type	Total
Light distribution	Asymmetric
CCT (K)	2700
CRI>	95
Extreme cut off	No

Electrical

Insulation class	I
Frequency (Hz)	50/60
Main voltage (Vac)	100-240
Power supply	Integrated
Dimmable	Yes
Power supply type	Dimmable 0-10V, Dimmable 1-10V, Dimmable DALI 1, Dimmable Push
Dimming interface	Remote Dimmable (Dimmer Not Included)
Batteries inside	No

Ecodesign and Energy Labelling

This product contains a light source of energy efficiency class F

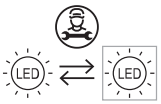

Replaceable (LED only) light source by a professional

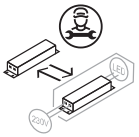

Replaceable control gear by a professional

©2026 Flos - P.IVA 00290820174 - 3/6/2026

In our constantly evolving world and business, technical upgrades happen every day. This means all product specifications and data are subject to change without warning in order t improve reliability, function, performance or otherwise. We make every effort to ensure the accuracy of our product images, however due to different lighting and screens used for viewing, the colours may vary. Images are indicative of the quality and style of the product but may not represent the precise details of the product you receive. This is because we are constantly working to make improvements. For aesthetic reasons, cables and/or electrical elements are often not shown. Refer to technical data sheets for all technical data. Images and colours are not part of any contract or warranty in any way.

Spare Parts

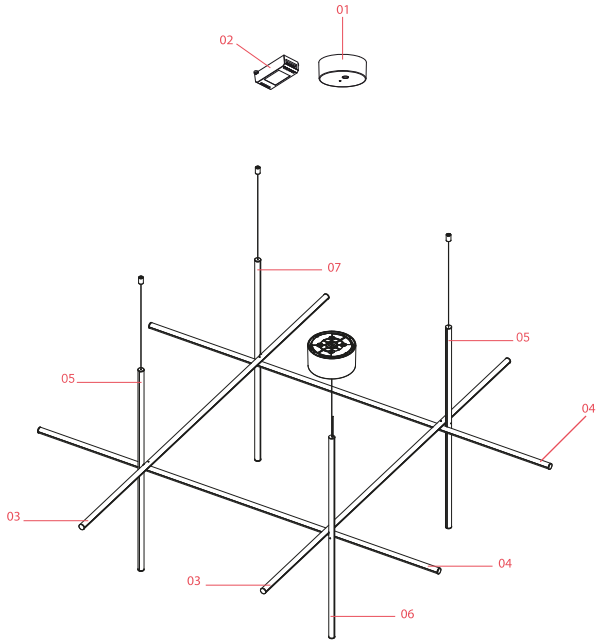

00.	Push button and cables assembly for dimmer	RF27318
01.	Coordinates S Assembly Big Rose Argent	RF1873133
02.	Led dimmer kit	RF34197
04.	Coordinates Rod Assembly L1760 H-10 Argent	RF30918
05.	Coordinates Suspension 4 Rod Assembly L920 S-14 Argent	RF30922
06.	Rod Assembly L920 SA-12 Argent	RF30920
07.	Coordinates Suspension 4 Rod Assembly L920 S-13 Argent	RF30921

©2026 Flos - P.IVA 00290820174 - 3/6/2026

In our constantly evolving world and business, technical upgrades happen every day. This means all product specifications and data are subject to change without warning in order t improve reliability, function, performance or otherwise. We make every effort to ensure the accuracy of our product images, however due to different lighting and screens used for viewing, the colours may vary. Images are indicative of the quality and style of the product but may not represent the precise details of the product you receive. This is because we are constantly working to make improvements. For aesthetic reasons, cables and/or electrical elements are often not shown. Refer to technical data sheets for all technical data. Images and colours are not part of any contract or warranty in any way.

RF27318

Push button and cables assembly for dimmer

RF1873133

Coordinates S Assembly Big Rose Argent

RF34197

Led dimmer kit

RF30918

Coordinates Rod Assembly L1760 H-10 Argent

RF30922

Coordinates Suspension 4 Rod Assembly L920 S-14 Argent

RF30920

Rod Assembly L920 SA-12 Argent

RF30921

Coordinates Suspension 4 Rod Assembly L920 S-13 Argent

©2026 Flos - P.IVA 00290820174 - 3/6/2026

In our constantly evolving world and business, technical upgrades happen every day. This means all product specifications and data are subject to change without warning in order t improve reliability, function, performance or otherwise. We make every effort to ensure the accuracy of our product images, however due to different lighting and screens used for viewing, the colours may vary. Images are indicative of the quality and style of the product but may not represent the precise details of the product you receive. This is because we are constantly working to make improvements. For aesthetic reasons, cables and/or electrical elements are often not shown. Refer to technical data sheets for all technical data. Images and colours are not part of any contract or warranty in any way.