FLOS

F1880044 Anodized Champagne

Coordinates Module Suspension

Designed by Michael Anastassiades, 2020

180W - 10230lm - 2700K - CRI> 90

Coordinates is a lighting system with diffuse light composed of horizontal and vertical luminaries arranged in a bright grid of various shapes and complexities. Each element is made of extruded anodized aluminium with a champagne finish and a diffuser in platinum optical silicone with an integrated LED strip (CRI 95). Each element is powered and supported by an invisible electrical and mechanical connection designed specifically to allow for the composition of the 4 hanging models (S1, S2, S3, S4) with 2.5-m cables. The 'S Module' is also available. Its geometry was designed to be repeated to create large grids for custom installations. Each Coordinates configuration includes its own ceiling rose, whose integrated electronics allow for the use of different dimmer systems: push, 1-10, DALI. In the absence of these systems, the amount of light can be set during installation with the push system included in the rose. The related Cl III version is also available for each configuration for installations with a remote power supply.

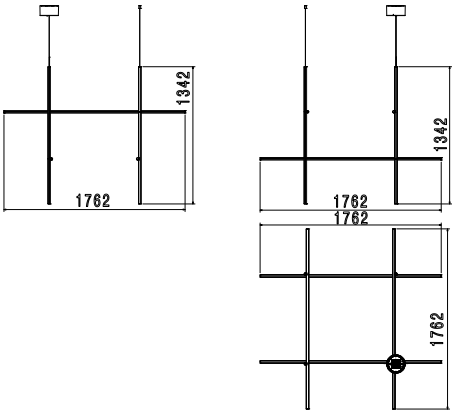

Are you a professional and your project needs consulting and support?

BOOK AN APPOINTMENT

Download

Mounting instructions PDF

Photometric Files

ULD ZIP

Technical Drawings

3D ZIP

Bim ZIP

Main specifications

EAN	8059607030820
Mounting	Suspension
Environments	Indoor dry location
Light source type	LED
Light sources included	Yes
LED type	LED Module
Power (W)	180
Lumen Output (lm)	10230

Physical

Colour	Anodized Champagne
Length (mm)	1770
Cord colour	Clear
Cord length (mm)	2400
Canopy colour	Anodized Champagne
Canopy length/diameter (mm)	181
Canopy height (mm)	95
Net weight (kg)	8.7
Package volume (m3)	0.06
IP internal	20

©2026 Flos - P.IVA 00290820174 - 2/23/2026

In our constantly evolving world and business, technical upgrades happen every day. This means all product specifications and data are subject to change without warning in order t improve reliability, function, performance or otherwise. We make every effort to ensure the accuracy of our product images, however due to different lighting and screens used for viewing, the colours may vary. Images are indicative of the quality and style of the product but may not represent the precise details of the product you receive. This is because we are constantly working to make improvements. For aesthetic reasons, cables and/or electrical elements are often not shown. Refer to technical data sheets for all technical data. Images and colours are not part of any contract or warranty in any way.

Photometric

Lighting type	Total
Light distribution	Asymmetric
CCT (K)	2700
CRI>	90
Extreme cut off	No

Electrical

Insulation class	I
Frequency (Hz)	50/60
Main voltage (Vac)	100-240
Power supply	Integrated
Dimmable	Yes
Power supply type	Dimmable 0-10V, Dimmable 1-10V, Dimmable DALI 1, Dimmable Push
Dimming interface	Remote Dimmable (Dimmer Not Included)
Batteries inside	No

Ecodesign and Energy Labelling

This product contains a light source of energy efficiency class F

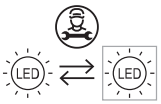

Replaceable (LED only) light source by a professional

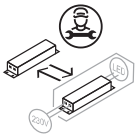

Replaceable control gear by a professional

©2026 Flos - P.IVA 00290820174 - 2/23/2026

In our constantly evolving world and business, technical upgrades happen every day. This means all product specifications and data are subject to change without warning in order t improve reliability, function, performance or otherwise. We make every effort to ensure the accuracy of our product images, however due to different lighting and screens used for viewing, the colours may vary. Images are indicative of the quality and style of the product but may not represent the precise details of the product you receive. This is because we are constantly working to make improvements. For aesthetic reasons, cables and/or electrical elements are often not shown. Refer to technical data sheets for all technical data. Images and colours are not part of any contract or warranty in any way.

Spare Parts

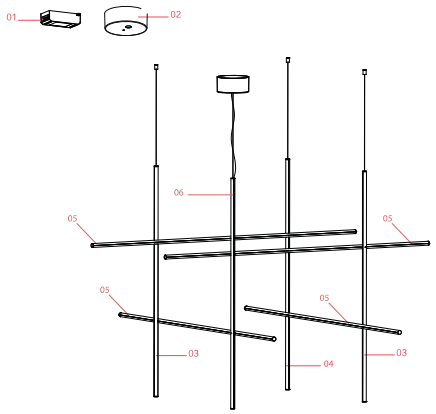

00.	Push button and cables assembly for dimmer	RF27318
01.	Led dimmer kit	RF34197
02.	Coordinates S Assembly Big Rose Anodized Champagne	RF1873144
03.	Coordinates S Rod Assembly L1340 S-29 Anodized Champagne	RF30988
04.	Coordinates S Rod Assembly L1340 S-30 Anodized Champagne	RF30989
05.	Coordinates S Rod Assembly L1760 H-31 Anodized Champagne	RF30990
06.	Coordinates S Rod Assembly L1340 SA-28 Anodized Champagne	RF31460

©2026 Flos - P.IVA 00290820174 - 2/23/2026

In our constantly evolving world and business, technical upgrades happen every day. This means all product specifications and data are subject to change without warning in order t improve reliability, function, performance or otherwise. We make every effort to ensure the accuracy of our product images, however due to different lighting and screens used for viewing, the colours may vary. Images are indicative of the quality and style of the product but may not represent the precise details of the product you receive. This is because we are constantly working to make improvements. For aesthetic reasons, cables and/or electrical elements are often not shown. Refer to technical data sheets for all technical data. Images and colours are not part of any contract or warranty in any way.

RF27318

Push button and cables assembly for dimmer

RF34197

Led dimmer kit

RF1873144

Coordinates S Assembly Big Rose Anodized Champagne

RF30988

Coordinates S Rod Assembly L1340 S-29 Anodized Champagne

RF30989

Coordinates S Rod Assembly L1340 S-30 Anodized Champagne

RF30990

Coordinates S Rod Assembly L1760 H-31 Anodized Champagne

RF31460

Coordinates S Rod Assembly L1340 SA-28 Anodized Champagne

©2026 Flos - P.IVA 00290820174 - 2/23/2026

In our constantly evolving world and business, technical upgrades happen every day. This means all product specifications and data are subject to change without warning in order t improve reliability, function, performance or otherwise. We make every effort to ensure the accuracy of our product images, however due to different lighting and screens used for viewing, the colours may vary. Images are indicative of the quality and style of the product but may not represent the precise details of the product you receive. This is because we are constantly working to make improvements. For aesthetic reasons, cables and/or electrical elements are often not shown. Refer to technical data sheets for all technical data. Images and colours are not part of any contract or warranty in any way.