FLOS

F1011046 Bronze

Bibliotheque Nationale

Designed by Philippe Starck, 2013

Halogen - 150W

Floor lamp with diffuse light. Base, rod stand and diffuser stand in chrome-plated die-cast zinc. Base cover in zinc-plated P04 steel sheet. Internal diffuser and lamp-holder stand in opal coloured injection die-stamped PC. The external diffusers are available in matching PVC fabric, injection die-stamped methacrylate with clear or smoke-grey finish, or in silver or bronze on the inner surface, by vacuum aluminum coating. Upper ring in clear injection die-stamped PC. Brackets in polished stainless steel. A USB outlet placed on the base enables the most common smartphones and tablets to be recharged (max 2A).

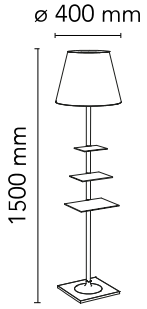

Are you a professional and your project needs consulting and support?

BOOK AN APPOINTMENT

Main specifications

EAN	8059607001073
Mounting	Floor
Environments	Indoor dry location
Light source type	Bulb
Light sources included	No
Lamp category	Halogen
Lamp holders	E27
Ilcos	HSGS
Number of lamps	1
Power (W)	150

Physical

Colour	Bronze
Length (mm)	400
Cord colour	Black
Cord length (mm)	2010
Net weight (kg)	10.87
Package volume (m3)	0.39
IP internal	20

Download

Mounting instructions PDF

©2026 Flos - P.IVA 00290820174 - 3/6/2026

In our constantly evolving world and business, technical upgrades happen every day. This means all product specifications and data are subject to change without warning in order t improve reliability, function, performance or otherwise. We make every effort to ensure the accuracy of our product images, however due to different lighting and screens used for viewing, the colours may vary. Images are indicative of the quality and style of the product but may not represent the precise details of the product you receive. This is because we are constantly working to make improvements. For aesthetic reasons, cables and/or electrical elements are often not shown. Refer to technical data sheets for all technical data. Images and colours are not part of any contract or warranty in any way.

Photometric

Lighting type	Total
Light distribution	Symmetric
Extreme cut off	No

Electrical

Insulation class	II
Frequency (Hz)	50/60
Main voltage (Vac)	220-240
Dimmable	Yes
Dimming interface	Dimmer Integrated
Plug type	Type C
Batteries inside	No

©2026 Flos - P.IVA 00290820174 - 3/6/2026

In our constantly evolving world and business, technical upgrades happen every day. This means all product specifications and data are subject to change without warning in order t improve reliability, function, performance or otherwise. We make every effort to ensure the accuracy of our product images, however due to different lighting and screens used for viewing, the colours may vary. Images are indicative of the quality and style of the product but may not represent the precise details of the product you receive. This is because we are constantly working to make improvements. For aesthetic reasons, cables and/or electrical elements are often not shown. Refer to technical data sheets for all technical data. Images and colours are not part of any contract or warranty in any way.

Bulbs

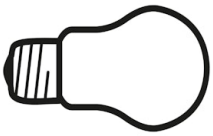

NOT INCLUDED

RF26998

LED 21W E27 2450lm 3000K
DIMMER

©2026 Flos - P.IVA 00290820174 - 3/6/2026

In our constantly evolving world and business, technical upgrades happen every day. This means all product specifications and data are subject to change without warning in order t improve reliability, function, performance or otherwise. We make every effort to ensure the accuracy of our product images, however due to different lighting and screens used for viewing, the colours may vary. Images are indicative of the quality and style of the product but may not represent the precise details of the product you receive. This is because we are constantly working to make improvements. For aesthetic reasons, cables and/or electrical elements are often not shown. Refer to technical data sheets for all technical data. Images and colours are not part of any contract or warranty in any way.

Spare Parts

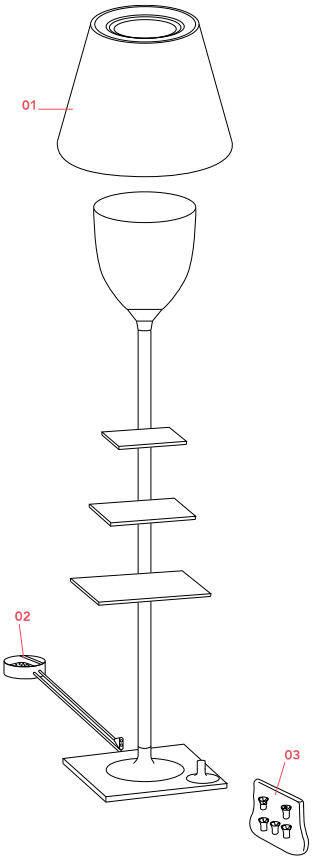

01.	aluminized bronze diffuser assembly	F6278046
02.	Led rondo' dimmer 220/240v 40-250w 4-100w	RF28045
03.	Bibliotheque Nationale - Kit of 5 black feet for base	RF05574

©2026 Flos - P.IVA 00290820174 - 3/6/2026

In our constantly evolving world and business, technical upgrades happen every day. This means all product specifications and data are subject to change without warning in order t improve reliability, function, performance or otherwise. We make every effort to ensure the accuracy of our product images, however due to different lighting and screens used for viewing, the colours may vary. Images are indicative of the quality and style of the product but may not represent the precise details of the product you receive. This is because we are constantly working to make improvements. For aesthetic reasons, cables and/or electrical elements are often not shown. Refer to technical data sheets for all technical data. Images and colours are not part of any contract or warranty in any way.

Thumbnail

F6278046

aluminized bronze diffuser assembly

RF28045

Led rondo' dimmer 220/240v 40-250w 4-100w

RF05574

Bibliotheque Nationale - Kit of 5 black feet for base

©2026 Flos - P.IVA 00290820174 - 3/6/2026

In our constantly evolving world and business, technical upgrades happen every day. This means all product specifications and data are subject to change without warning in order t improve reliability, function, performance or otherwise. We make every effort to ensure the accuracy of our product images, however due to different lighting and screens used for viewing, the colours may vary. Images are indicative of the quality and style of the product but may not represent the precise details of the product you receive. This is because we are constantly working to make improvements. For aesthetic reasons, cables and/or electrical elements are often not shown. Refer to technical data sheets for all technical data. Images and colours are not part of any contract or warranty in any way.