FLOS

A0300099 Chromatica

265 Chromatica

Designed by Paolo Rizzatto, 1973

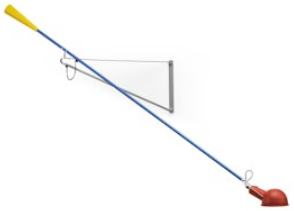

Halogen - 75W

Wall lamp providing direct light. Painted steel adjustable arm and reflector. Chrome-plated brass reflector support. Cast iron tapered counterweight. Painted steel wall fixture.

Are you a professional and your project needs consulting and support?

BOOK AN APPOINTMENT

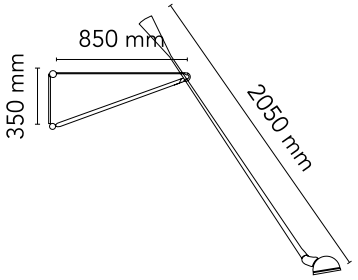

Main specifications

EAN	8059607040522
Mounting	Wall
Environments	Indoor dry location
Light source type	Bulb
Light sources included	No
Lamp category	Halogen
Lamp holders	E27
Ilcos	HSGSA
Number of lamps	1
Power (W)	75

Physical

Colour	Chromatica
Length (mm)	2450
Cord length (mm)	2030
Net weight (kg)	5.7
Package height (mm)	2110
Package width (mm)	150
Package length (mm)	390
Package volume (m3)	0.12
IP internal	20

Download

Mounting instructions PDF

©2026 Flos - P.IVA 00290820174 - 3/6/2026

In our constantly evolving world and business, technical upgrades happen every day. This means all product specifications and data are subject to change without warning in order t improve reliability, function, performance or otherwise. We make every effort to ensure the accuracy of our product images, however due to different lighting and screens used for viewing, the colours may vary. Images are indicative of the quality and style of the product but may not represent the precise details of the product you receive. This is because we are constantly working to make improvements. For aesthetic reasons, cables and/or electrical elements are often not shown. Refer to technical data sheets for all technical data. Images and colours are not part of any contract or warranty in any way.

Photometric

Light distribution	Asymmetric
Extreme cut off	No

Electrical

Insulation class	II
Frequency (Hz)	50/60
Main voltage (Vac)	220-250
Dimmable	Yes
Dimming interface	Switch Integrated (Remote Dimmable)
Plug type	Type C
Batteries inside	No

©2026 Flos - P.IVA 00290820174 - 3/6/2026

In our constantly evolving world and business, technical upgrades happen every day. This means all product specifications and data are subject to change without warning in order t improve reliability, function, performance or otherwise. We make every effort to ensure the accuracy of our product images, however due to different lighting and screens used for viewing, the colours may vary. Images are indicative of the quality and style of the product but may not represent the precise details of the product you receive. This is because we are constantly working to make improvements. For aesthetic reasons, cables and/or electrical elements are often not shown. Refer to technical data sheets for all technical data. Images and colours are not part of any contract or warranty in any way.

Bulbs

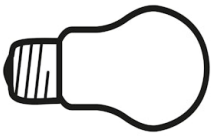

NOT INCLUDED

RF32563

LED Lamp 11.5W E27 220-240V
2700K A70

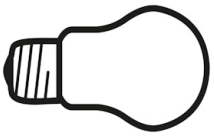

NOT INCLUDED

RF32564

LED Lamp 11.5W E27 220-240V
3000K A70

©2026 Flos - P.IVA 00290820174 - 3/6/2026

In our constantly evolving world and business, technical upgrades happen every day. This means all product specifications and data are subject to change without warning in order t improve reliability, function, performance or otherwise. We make every effort to ensure the accuracy of our product images, however due to different lighting and screens used for viewing, the colours may vary. Images are indicative of the quality and style of the product but may not represent the precise details of the product you receive. This is because we are constantly working to make improvements. For aesthetic reasons, cables and/or electrical elements are often not shown. Refer to technical data sheets for all technical data. Images and colours are not part of any contract or warranty in any way.

Spare Parts

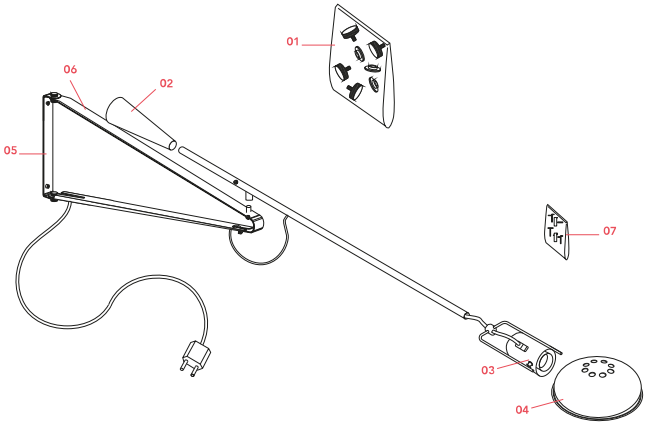

01.	265/265 Small Screw set for wall attachment	RA0300200
02.	265 Matt Yellow Counterweight	RF31192
03.	265 / 265 Small , Matt Red Lamp Holder with Reflector Support Assembly	RF31190
04.	265 / 265 Small, Matt Red Reflector	RF31189
05.	265 Matt Grey Wall Attachment	RF31194
06.	265 Matt Grey Triangle Bracket Suport	RF31193
07.	265/265 Small Screws bag group stm3x 3 ce c.10 p	RF11719

©2026 Flos - P.IVA 00290820174 - 3/6/2026

In our constantly evolving world and business, technical upgrades happen every day. This means all product specifications and data are subject to change without warning in order t improve reliability, function, performance or otherwise. We make every effort to ensure the accuracy of our product images, however due to different lighting and screens used for viewing, the colours may vary. Images are indicative of the quality and style of the product but may not represent the precise details of the product you receive. This is because we are constantly working to make improvements. For aesthetic reasons, cables and/or electrical elements are often not shown. Refer to technical data sheets for all technical data. Images and colours are not part of any contract or warranty in any way.

RA0300200

265/265 Small Screw set for wall attachment

RF31192

265 Matt Yellow Counterweight

RF31190

265 / 265 Small , Matt Red Lamp Holder with Reflector Support Assembly

RF31189

265 / 265 Small, Matt Red Reflector

RF31194

265 Matt Grey Wall Attachment

RF31193

265 Matt Grey Triangle Bracket Suport

RF11719

265/265 Small Screws bag group stm3x 3 ce c.10 p

©2026 Flos - P.IVA 00290820174 - 3/6/2026

In our constantly evolving world and business, technical upgrades happen every day. This means all product specifications and data are subject to change without warning in order t improve reliability, function, performance or otherwise. We make every effort to ensure the accuracy of our product images, however due to different lighting and screens used for viewing, the colours may vary. Images are indicative of the quality and style of the product but may not represent the precise details of the product you receive. This is because we are constantly working to make improvements. For aesthetic reasons, cables and/or electrical elements are often not shown. Refer to technical data sheets for all technical data. Images and colours are not part of any contract or warranty in any way.