EN

RF3335100

Glo-Ball Ceiling/Wall/Basic Zero diffuser assembly

WARNING! When installing and whenever acting on the appliance, ensure that the power supply has been switched off.
For the installation of the spare-part, it is necessary to consult a qualified electrician.

©2021 Flos - All rights reserved - www.flos.com
Flos reserves the right to introduce any changes to its own models, without prior notice.

EN

RF3335100

Glo-Ball Ceiling/Wall/Basic Zero diffuser assembly

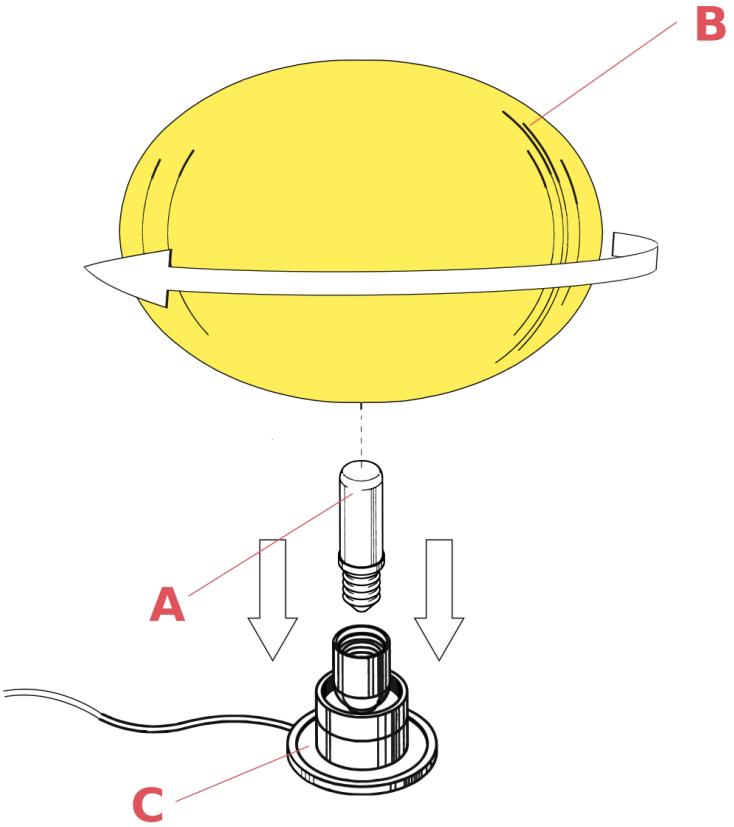

Fig.1

Insert the bulb (A). Position the diffuser (B) on the support (C) and secure it, turning it clockwise.

WARNING! When installing and whenever acting on the appliance, ensure that the power supply has been switched off.
For the installation of the spare-part, it is necessary to consult a qualified electrician.

©2021 Flos - All rights reserved - www.flos.com
Flos reserves the right to introduce any changes to its own models, without prior notice.

EN

RF3335100

Glo-Ball Ceiling/Wall/Basic Zero diffuser assembly

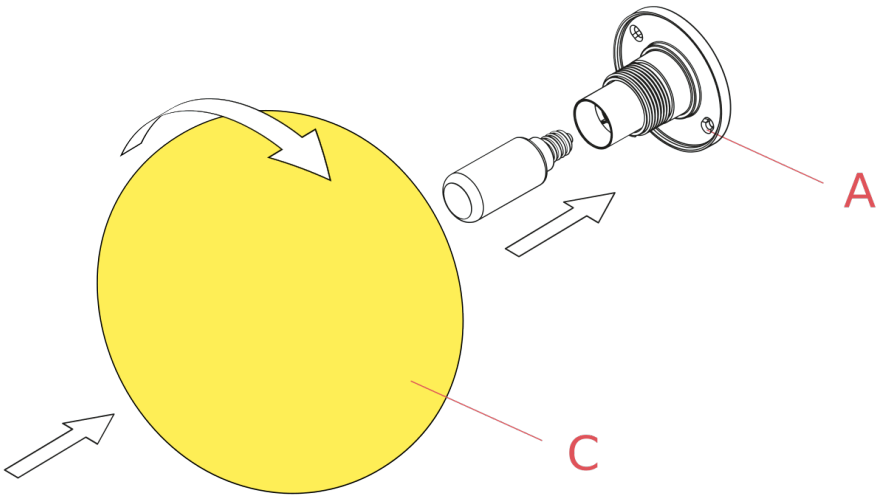

Fig.1

Insert the light bulb and screw the diffuser (C) onto the body (A).

WARNING! When installing and whenever acting on the appliance, ensure that the power supply has been switched off.
For the installation of the spare-part, it is necessary to consult a qualified electrician.

©2021 Flos - All rights reserved - www.flos.com
Flos reserves the right to introduce any changes to its own models, without prior notice.