EN

RF13905

Locking key tool

WARNING! When installing and whenever acting on the appliance, ensure that the power supply has been switched off.
For the installation of the spare-part, it is necessary to consult a qualified electrician.

©2021 Flos - All rights reserved - www.flos.com
Flos reserves the right to introduce any changes to its own models, without prior notice.

EN

RF13905

Locking key tool

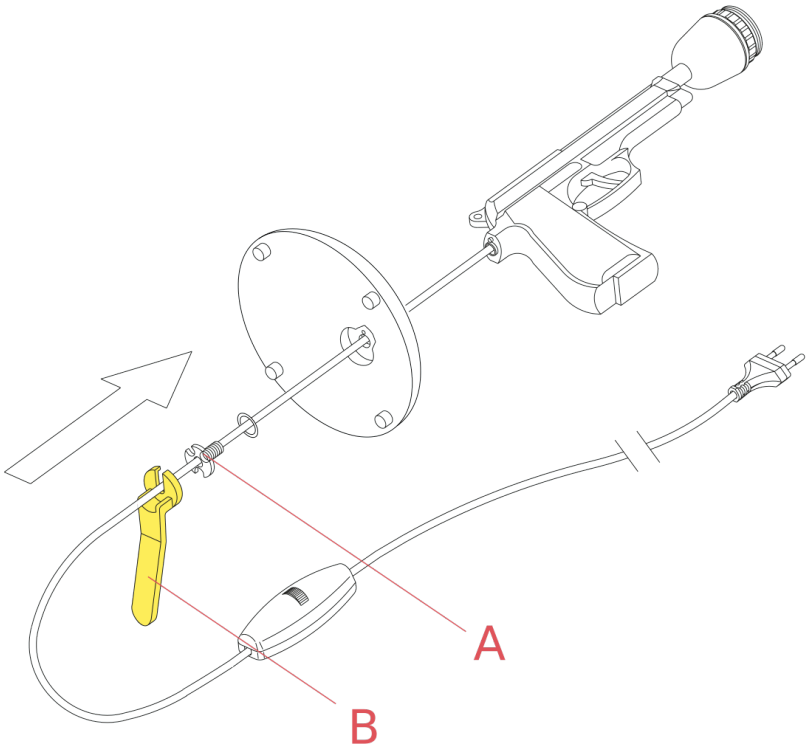

Fig.1

Fasten the screw (A) by utilizing the key (B).

WARNING! When installing and whenever acting on the appliance, ensure that the power supply has been switched off.
For the installation of the spare-part, it is necessary to consult a qualified electrician.

©2021 Flos - All rights reserved - www.flos.com
Flos reserves the right to introduce any changes to its own models, without prior notice.

EN

RF13905

Locking key tool

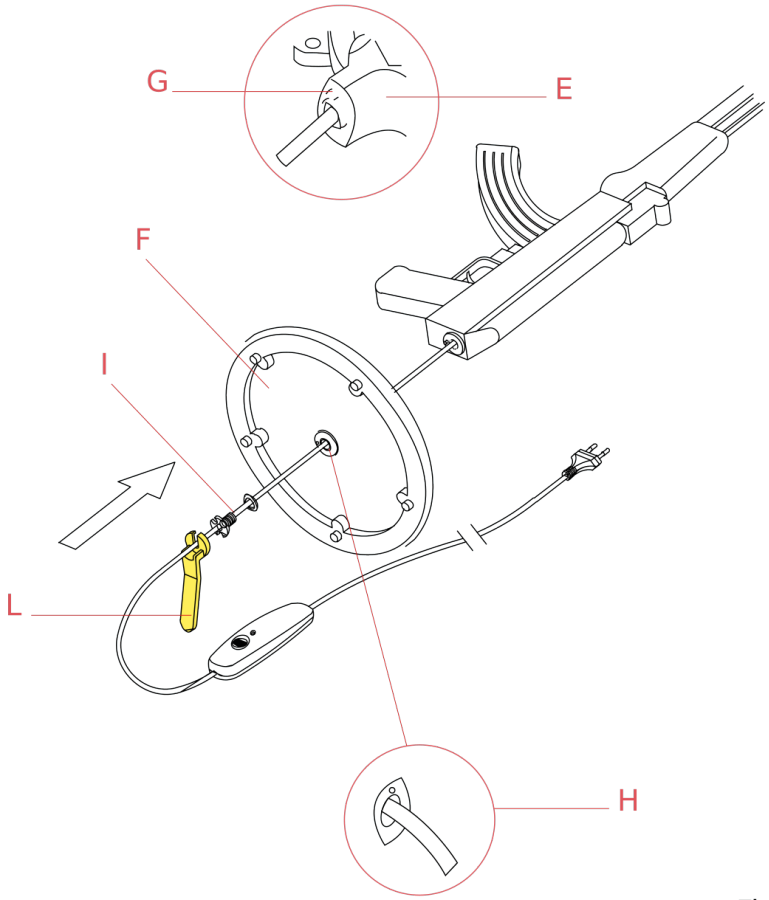

Fig.1

Position the lamp structure (E) on the base (F) ensuring that the safety pin (G) enters in its appropriate hole (H);
Lock the base (F) on to the lamp structure (E) by tightening the locking screw (I) with the tool key (L).

WARNING! When installing and whenever acting on the appliance, ensure that the power supply has been switched off.
For the installation of the spare-part, it is necessary to consult a qualified electrician.

©2021 Flos - All rights reserved - www.flos.com
Flos reserves the right to introduce any changes to its own models, without prior notice.

EN

RF13905

Locking key tool

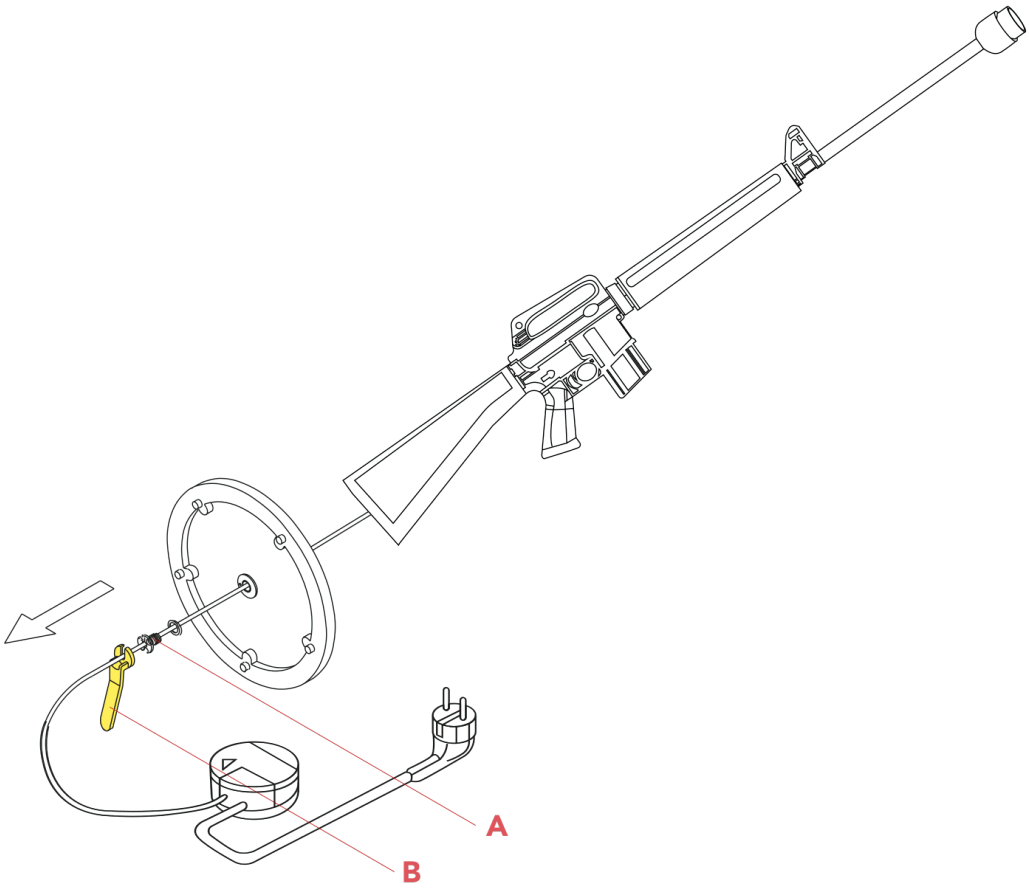

Fig.1

Fasten the screw (A) by utilizing the key (B).

WARNING! When installing and whenever acting on the appliance, ensure that the power supply has been switched off.
For the installation of the spare-part, it is necessary to consult a qualified electrician.

©2021 Flos - All rights reserved - www.flos.com
Flos reserves the right to introduce any changes to its own models, without prior notice.