EN

RF6330000

Stylos external diffuser

WARNING! When installing and whenever acting on the appliance, ensure that the power supply has been switched off.
For the installation of the spare-part, it is necessary to consult a qualified electrician.

©2021 Flos - All rights reserved - www.flos.com
Flos reserves the right to introduce any changes to its own models, without prior notice.

EN

RF6330000

Stylos external diffuser

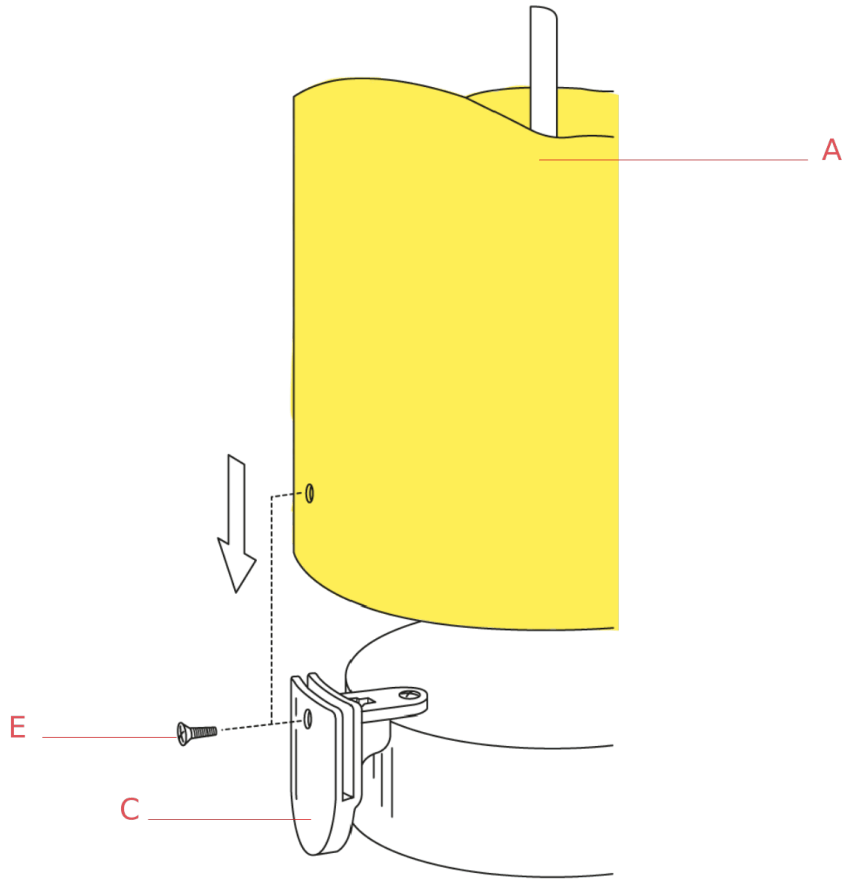

Fig.1

Slide the diffuser (A) through the metal stem.
Insert the diffuser (A) into the metal structure (B) and through the openings in the supports (C). Utilize the tip of a screwdriver to help your self if necessary to align the holes in the diffuser to correspond with those present on the support.
Assemble the diffuser (A) by fastening screws (E).

WARNING! When installing and whenever acting on the appliance, ensure that the power supply has been switched off.
For the installation of the spare-part, it is necessary to consult a qualified electrician.

©2021 Flos - All rights reserved - www.flos.com
Flos reserves the right to introduce any changes to its own models, without prior notice.