EN

F6320004

Stylos Base

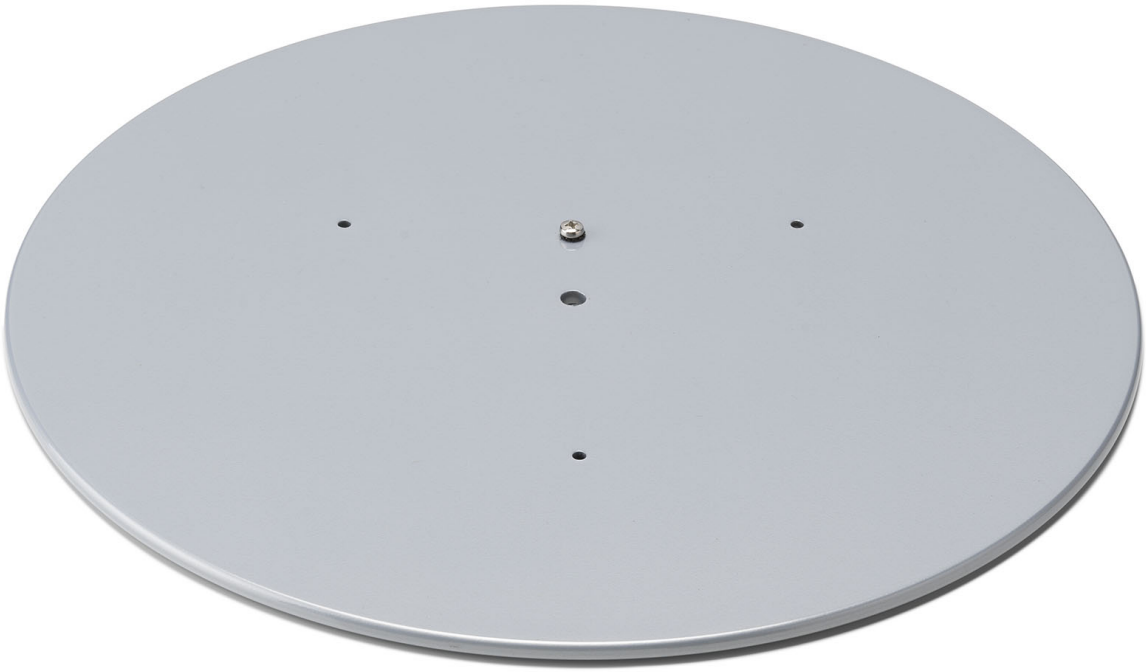

WARNING! When installing and whenever acting on the appliance, ensure that the power supply has been switched off.
For the installation of the spare-part, it is necessary to consult a qualified electrician.

©2021 Flos - All rights reserved - www.flos.com
Flos reserves the right to introduce any changes to its own models, without prior notice.

EN

F6320004

Stylos Base

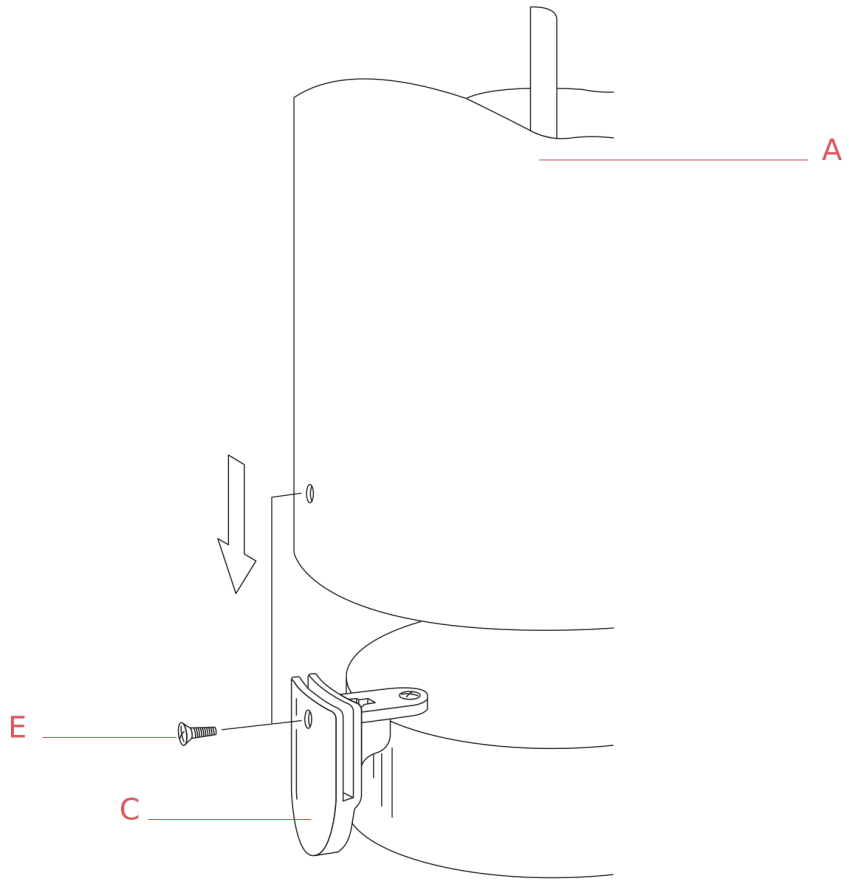

Fig.1

Unfasten the three screws (E) from the support (C) and then lift-up the diffuser (A).

WARNING! When installing and whenever acting on the appliance, ensure that the power supply has been switched off.
For the installation of the spare-part, it is necessary to consult a qualified electrician.

©2021 Flos - All rights reserved - www.flos.com
Flos reserves the right to introduce any changes to its own models, without prior notice.

EN

F6320004

Stylos Base

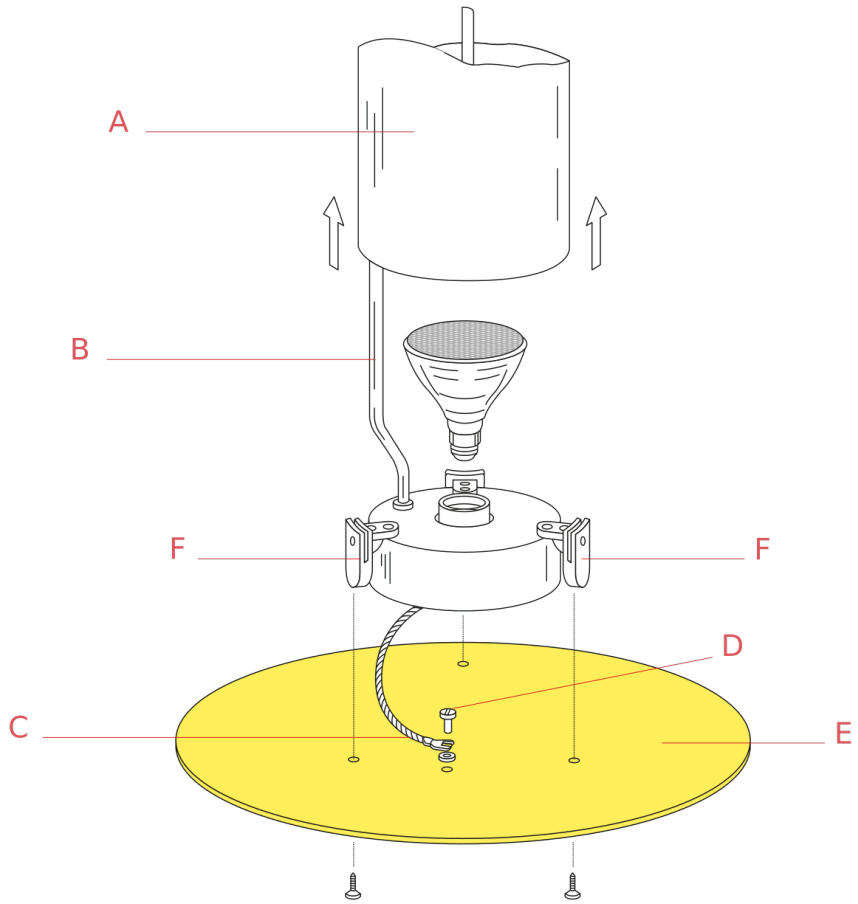

Fig.2

Remove the diffuser (A) from the metal stem (B).
Unfasten the "PAR" bulb from the lower lamp holder.
Remove the base (E) from the supports (F) by unfastening the three self-threading screws.
Unfasten the screw (D) and disconnect the earth wire (C).
Assemble now the new spare-part:
Connect the earth cable (C) to the base (e) by fastening the screw (D), ensuring to insert the cable between the screw and the notched washer; Assemble the base (E) to the supports (F) by fastening the three self-threading screws.
Screw the "PAR" bulb into the lower bulb-holder.
Slide the diffuser (A) through the metal stem (B).

WARNING! When installing and whenever acting on the appliance, ensure that the power supply has been switched off.
For the installation of the spare-part, it is necessary to consult a qualified electrician.

©2021 Flos - All rights reserved - www.flos.com
Flos reserves the right to introduce any changes to its own models, without prior notice.

EN

F6320004

Stylos Base

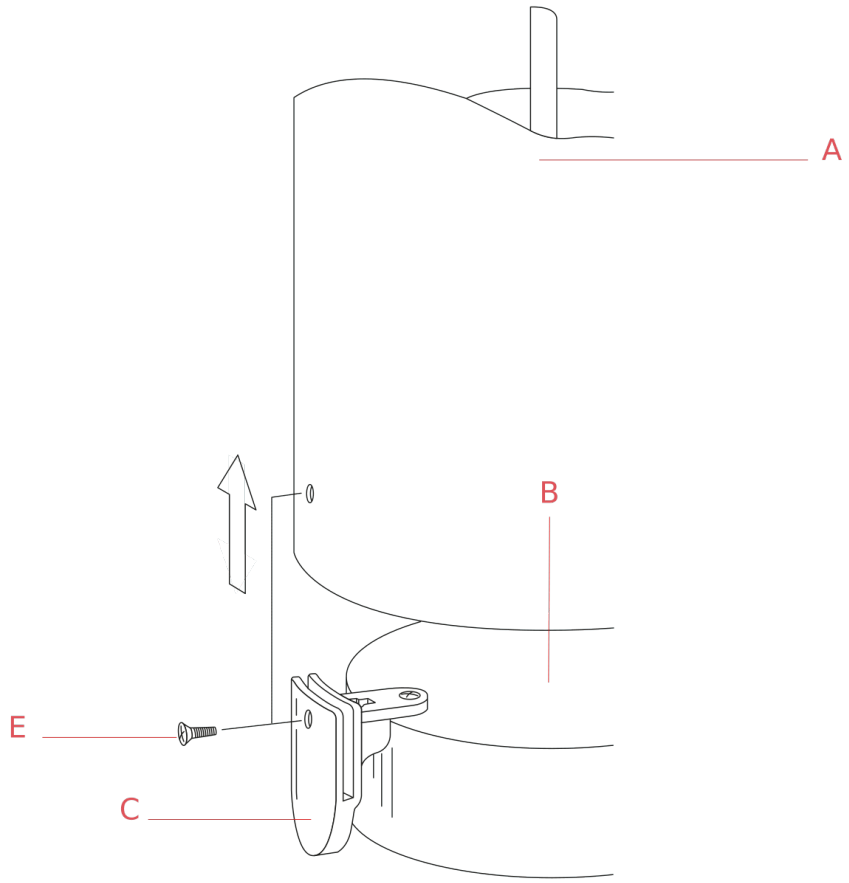

Fig.3

Insert the diffuser (A) into the metal structure (B) and through the openings in the supports (C). Utilize the tip of a screwdriver to help your self if necessary to align the holes in the diffuser to correspond with those present on the support.
Assemble the diffuser (A) by fastening screws (E).

WARNING! When installing and whenever acting on the appliance, ensure that the power supply has been switched off.
For the installation of the spare-part, it is necessary to consult a qualified electrician.

©2021 Flos - All rights reserved - www.flos.com
Flos reserves the right to introduce any changes to its own models, without prior notice.